FIRST ANGLE PROJECTION

(ALL DIMENSIONS ARE IN mm)

DRG.NO 2 478 10 00018

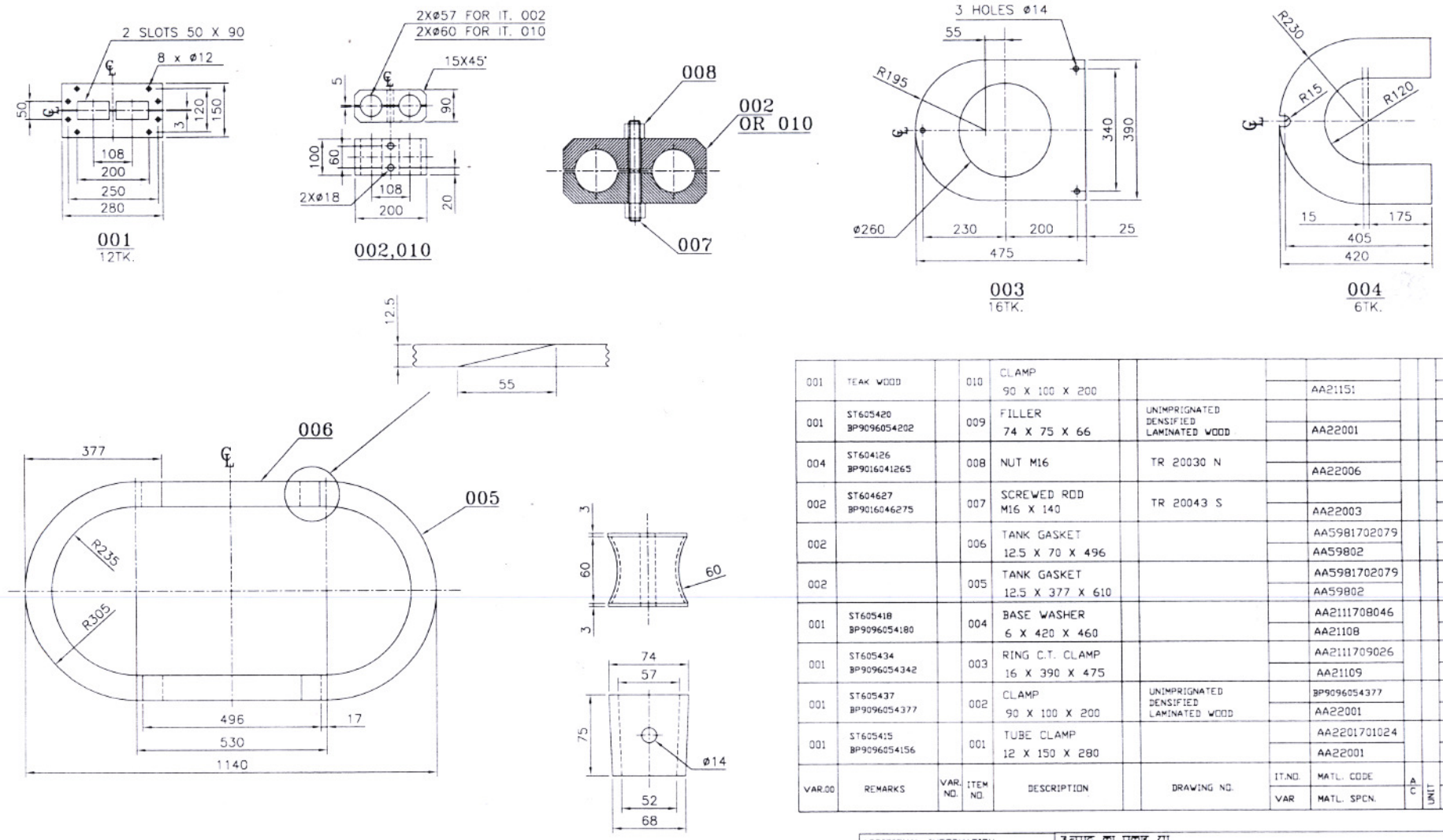

VAR.00	REMARKS	VAR. NO.	ITEM NO.	DESCRIPTION	DRAWING NO.	IT.NO. / VAR	MATL. CODE / MATL. SPCN.	A/C	UNIT	UNIT WT. / QTY.	GS
001	TEAK WOOD		010	CLAMP 90 X 100 X 200			AA21151				
001	ST605420 BP9096054202		009	FILLER 74 X 75 X 66	UNIMPRIGNATED DENSIFIED LAMINATED WOOD		AA22001				
004	ST604126 BP9016041265		008	NUT M16	TR 20030 N		AA22006				
002	ST604627 BP9016046275		007	SCREWED ROD M16 X 140	TR 20043 S		AA22003				
002			006	TANK GASKET 12.5 X 70 X 496			AA5981702079 / AA59802				
002			005	TANK GASKET 12.5 X 377 X 610			AA5981702079 / AA59802				
001	ST605418 BP9096054180		004	BASE WASHER 6 X 420 X 460			AA2111708046 / AA21108				
001	ST605434 BP9096054342		003	RING C.T. CLAMP 16 X 390 X 475			AA2111709026 / AA21109				
001	ST605437 BP9096054377		002	CLAMP 90 X 100 X 200	UNIMPRIGNATED DENSIFIED LAMINATED WOOD		BP9096054377 / AA22001				
001	ST605415 BP9096054156		001	TUBE CLAMP 12 X 150 X 280			AA2201701024 / AA22001				

ADDITIONAL INFORMATION ---

STATUS OF DRAWING U

DISTRIBUTION OF PRINTS TRM-1, TRM (P) -1

उत्पाद का प्रकार या ग्राहक /परियोजना का नाम
TYPE OF PRODUCT OR NAME OF CUSTOMER/PROJECT

भारत हेवी इलेक्ट्रिकल्स लिमिटेड भोपाल
BHARAT HEAVY ELECTRICALS LTD. BHOPAL

	नाम NAME	हस्ताक्षर SIGN	दि. DATE	वेर की संख्या NO.OF VAR
बनाया DRN	ABC	sd/	31.07.86	01
जाँचा CHK	SPV	sd/	05.08.86	
स्वीकृत APPD	PCJ	sd/	14.08.86	

REV	DATE	ALTERED / CHECKED / APPROVED	REV	DATE	ALTERED / CHECKED / APPROVED
ZONE			ZONE		

REV	DATE	ALTERED G.P. Dongare / CHECKED R. Yagnanand / APPROVED K.M. Nalik	DEPT	TRE	CODE	406
09	30.12.13					

ZONE DRG. UPDATE & REDRAWN

अनुपात SCALE 1:1

भार कि.ग्रा. WEIGHT(kg)

उसे. डाईंग का संदर्भ REF TO ASSY DRG –

मद क्र. ITEM NO.

मद संख्या NO.OF ITEM 010

शीर्षक /TITLE

CLAMP & SUPPORTS FOR 400 kV CT

DRAWING NO. 2 478 10 00018

पुन. REV 09

पृष्ठ क्र.SHT NO. पृष्ठों की सं.NO.OF SHT.