FIRST ANGLE PROJECTION

(ALL DIMENSIONS ARE IN mm)

DRG. NO. 5049024

THE INFORMATION ON THIS DOCUMENT IS THE PROPERTY OF BHARAT HEAVY ELECTRICALS LIMITED
IT MUST NOT BE USED DIRECTLY OR INDIRECTLY IN ANY WAY DETRIMENTAL TO THE INTEREST OF THE COMPANY

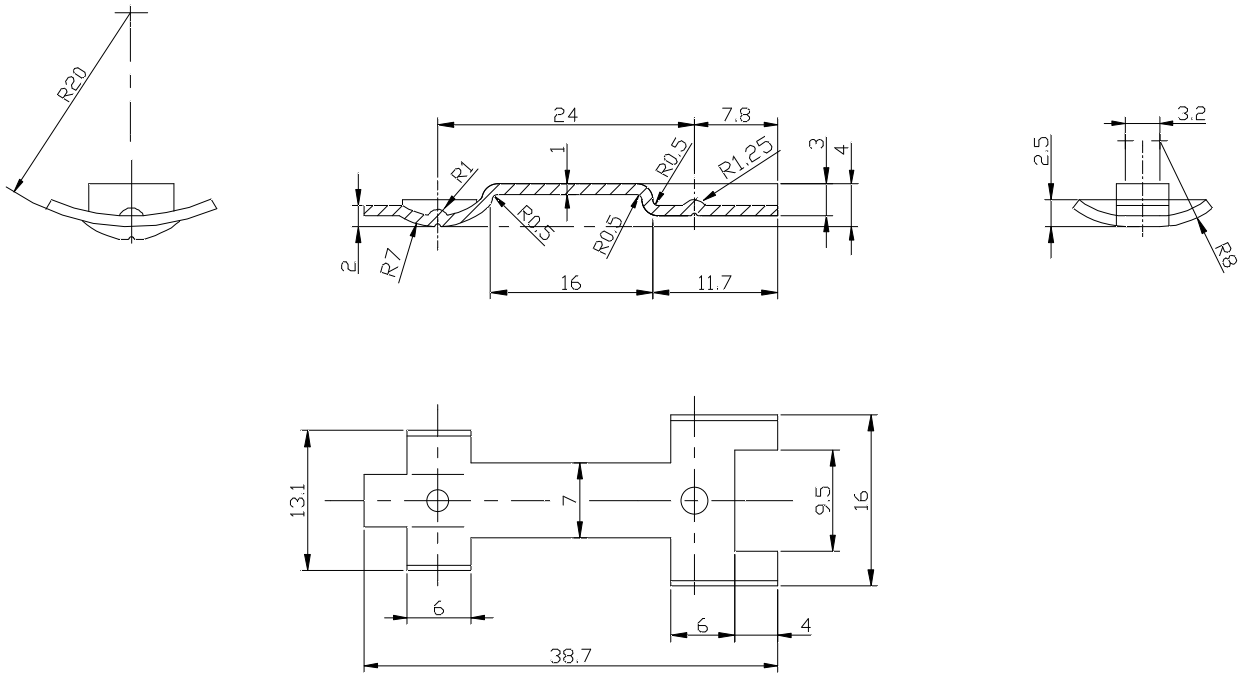

WEIGHT OF RAW SHT. = 0.0065 Kg.

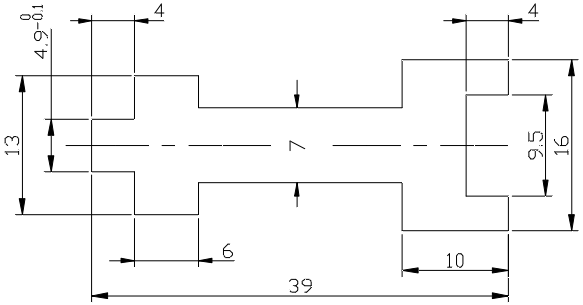

DEVELOPMENT

		001	1x16x39 LG. HARD SILVER STRIP				SG-10001		KG	0.00365		
65 75 REMARKS	78 79 VAR. NO.	25 27 ITEM NO.	29 58 DESCRIPTION	59 STD	60 77 DRAWING NO.	29 31 IT.NO. / 32 33 VAR.	34 45 MATL. CODE / 46 54 MATL. SPCN.	55 A-C	56 57 UNIT	58 65 UNIT WT. / 68 71 QTY.	72 GS	ZONE
28 → CARD TYPE-3			28 → CARD TYPE-1			28 → CARD TYPE-2						

ADDITIONAL INFORMATION

STATUS OF DRAWING

DISTRIBUTION OF PRINTS

SWE	SWM	SWM
1	3	1

mRikn dk i-dkj ;k
xk-gd@ifj;kstuk dk uke
TYPE OF PRODUCT OR NAME OF CUSTOMER/PROJECT

ON LOAD TAP CHANGER

HAkjr gsoh bysfDV&dYl fyfeVsM
HAksiky
BHARAT HEAVY ELECTRICALS LTD.
BHOPAL

	uke@NAME	gLrk@SIGN	fnaukd@ATE	asfj_ dh la[;k NO. OF VAR
cuk;k DRN	V.KUMKAR	Sd/-	03.01.77	
tWpk CKD	B.S.R	Sd/-	08.01.77	
vuqeksfnr APPD	B.S.S	Sd/-	08.01.77	

REV.	DATE		
		ALTERED	
		CHECKED	
		APPROVED	

REV.	DATE		
03	05.10.05	ALTERED	AKU
		CHECKED	SKP
		APPROVED	SK

DRAWING REDRAWN

(D.C.A. NO. 23997)

foHAkx DEPT SWE / dksM CODE 409	vu_ Vky_ uki dh Js.kh UNTOL.DIMS. GR. M AA0230208	vuqikr SCALE 2:1	HAkj fd_xk-_ WEIGHT (K.G.)	vls_ M&kbZox dk lanHAZ REF. TO ASSY. DRG. 5011482	en d-_ ITEM NO. / en_ la[;k NO. OF ITEM 001

'kh"AZdk TITLE

SLIDING CONTACT
(MBB CONTACT)

vkjs[A d-dk DRAWING NO. 5049024 | iqu_@EV 03

i="B d-@ No. 01 | i="Bkso dh la[;k NO. OF SHT. 01

5049024-R02-S01 REF. DRG. NO.

SIGN. & DATE

INVENTORY NO.

A3