FIRST ANGLE PROJECTION

(ALL DIMENSIONS ARE IN m.m.)

DRAWING NO. 5062987

THE INFORMATION ON THIS DOCUMENT IS THE PROPERTY OF BHARAT HEAVY ELECTRICALS LIMITED.
IT MUST NOT BE USED DIRECTLY OR INDIRECTLY IN ANY WAY DETRIMENTAL TO THE INTEREST OF THE COMPANY.

TOOL LIST		
ITEM	TOOL	DESCRIPTION
–	1520130	CNC HOLDING FIXTURE
–	1520131	TURNING FIXTURE
–	1520137	DRILL JIG
–	1520692	MILLING FIXTURE FOR HMT MV3 FOR 25 & 90°
–	1520708	T.S.REAMERø12H7 LONG SERIES

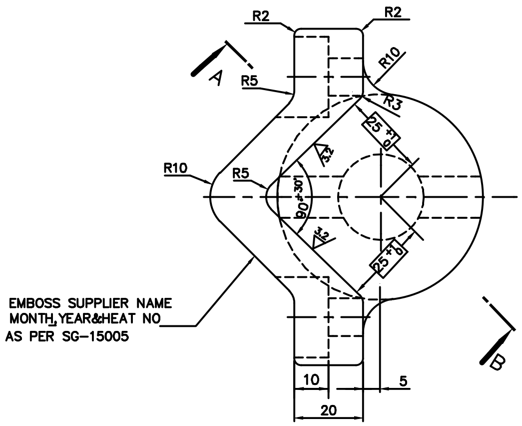

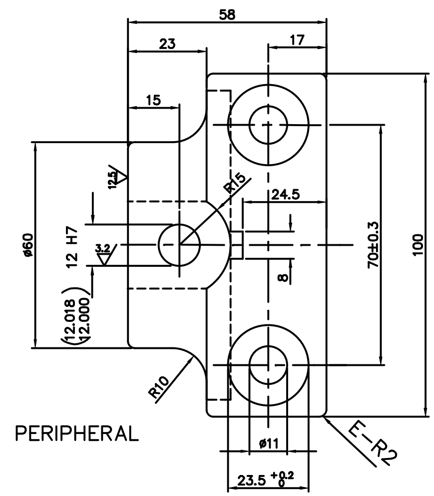

PERIPHERAL

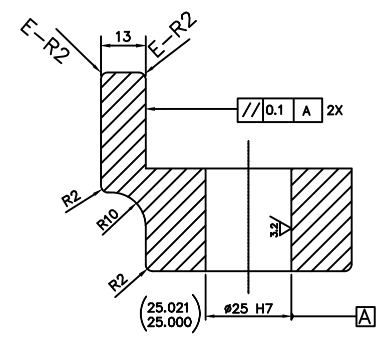

SECTION A–B
(TURNED AT 45°)

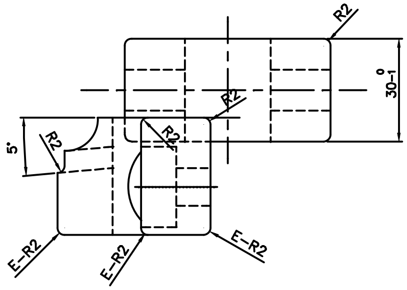

CASTING TOLERANCE 139GTA15/5 DIN1688

ROUND CORNERS TO SPHERICAL FORM.

√(12.5/ 3.2/)

VAR00	REMARKS	VAR. NO.	ITEM NO.	DESCRIPTION	STD	DRAWING NO.	IT.NO. / VAR.	MATL. CODE / MATL. SPCN.	A/C	UNIT	UNIT WT. / QTY.	GS	ZONE
	CASTING PART NO. 5200378		001	ALUMINUM ALLOY CHILLED CASTING				AA19954		KG.	0.35 / 001		

28 —— CARD TYPE-3 | 28 —— CARD TYPE-1 | 28 —— CARD TYPE-2

ADDITIONAL INFORMATION

STATUS OF DRAWING: B

DISTRIBUTION OF PRINTS		
SWE	SWM	TCX
1	3	1

TYPE OF PRODUCT OR NAME OF CUSTOMER / PROJECT: ON LOAD TAPCHANGER

BHARAT HEAVY ELECTRICALS LTD. BHOPAL

	NAME	SIGN	DATE
DRN.	V.KUMAR	Sd/–	16.05.82
CKD.	BSR	Sd/–	01.06.82
APPD.	R.K.S.	Sd/–	03.06.82

NO. OF VAR

REV.	DATE		
10	02.07.09	ALTERED	AKU
		CHECKED	KIRTI
		APPROVED	SKP

ZONE: DRG. REDRAWN AA19954 WAS BP19990 (D.C.A NO.–28938)

DEPT	UNTOL. DIMS. GR.	SCALE	WEIGHT (K.G.)	REF. TO ASSY. DRG.	ITEM NO.	NO. OF ITEM
SWE / CODE 409	M / AA 0230208	1:1	–	5086526		001

TITLE: COUPLING LOWER

DRAWING NO. 5062987 — REV 10

SHEET NO. 01 — NO. OF SHEETS 01

A2

INVENTORY NO. | SIGN. & DATE | REF. DRG. NO. 5062987-R09-S01

PRADEEP-CADZONE