FIRST ANGLE PROJECTION

ALL DIMENSIONS ARE IN mm

DRG. NO. 5062994

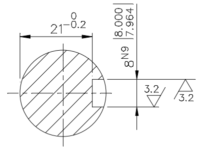

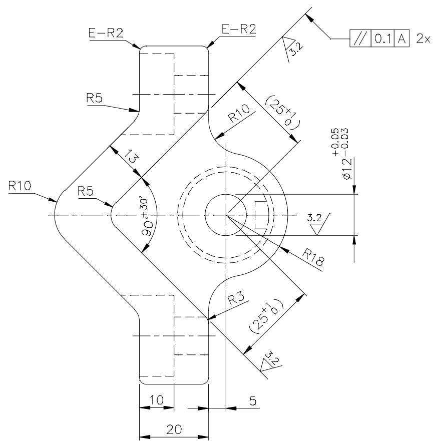

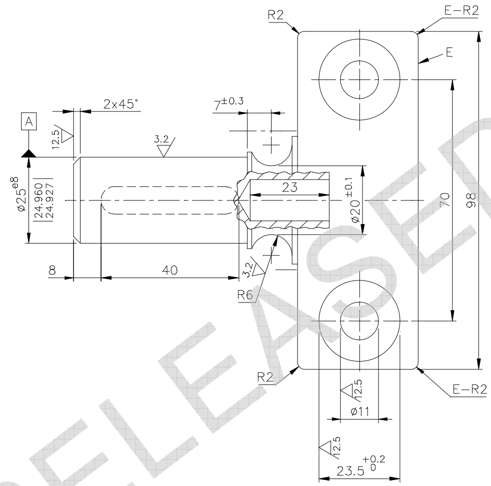

TOOL LIST		
ITEM	TOOL NO.	DESCRIPTION
–	1520130	CNC HOLDING FIXTURE
–	1520131	TURNING FIXTURE
–	1520132	FORM TOOL R6 FOR 3CAP'C'
–	1520133	KEY WAY SETTING BLOCK
–	1520401	DRILL JIG
–	1520693	MILLING FIXTURE FOR HMT-MV3 FOR 25 & 90°

Ra- SURFACE FINISH
Rt- NITRIDING THICKNESS

M RUPTURE=700...900 Nm.

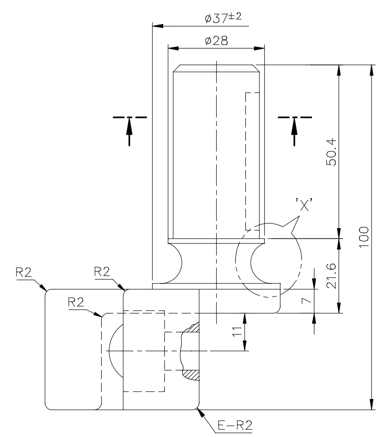

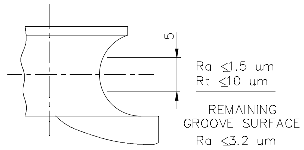

DETAIL-X

- LIQUID NITRIDING/TUFFTRIDING-TF2 TO ACHIEVE SURFACE HARDNESS HV 500-600 AS PER SG-15001.
- ROUND CORNERS TO SPHERICAL FORM.
- FORGING TOLERANCES ACC. TO DIN 7526.

∀ (12.5/∇, 3.2/∇)

001	FORGING PART NO. 5200379		001	CARBON STL. FORGING CLASS-4 NORMALISED				AA 19333			0.72 / 001	
VAR 00	REMARKS	VAR. NO.	ITEM NO.	DESCRIPTION	DRAWING NO. STD	IT.NO. / VAR.		MATL. CODE / MATL. SPCN.	A/C	UNIT	UNIT WT. / QTY.	ZONE / SS
28 → CARD TYPE-3			28 → CARD TYPE-1			28 → CARD TYPE-2						

ADDITIONAL INFORMATION
W.O. 61221-A-535-01

STATUS OF DRAWING B M

DISTRIBUTION OF PRINTS

SWE	SWM	TCX
1	3	1

उत्पाद का प्रकार या ग्राहक/परियोजना का नाम
TYPE OF PRODUCT OR NAME OF CUSTOMER/PROJECT

ON LOAD TAPCHANGER

भारत हेवी इलेक्ट्रिकल्स लिमिटेड भोपाल
BHARAT HEAVY ELECTRICALS LTD. BHOPAL

	नाम/NAME	हस्ता./SIGN.	दिनांक/DATE
बनाया DRN.	V.KUMAR	Sd/-	23.05.82
जाँचा CKD.	B.S.R.	Sd/-	01.06.82
स्वीकृत APPD.	R.K.S.	Sd/-	03.06.82

वे.रु. की संख्या NO. OF VAR.

REV.	DATE	ALTERED / CHECKED / APPROVED
14		DRAWING REDRAWN (DCA. NO. 21994)

विभाग DEPT SWE; कोड CODE 409; उन.टाल.माप की श्रेणी UNTOL. DIMS. GR. M AA 0230208; अनुपात SCALE 1:1; भार (कि.ग्रा.) WEIGHT (KG.); उसे.ड्राइंग का संदर्भ REF. TO ASSY. DRG. 5086908,909,910; मद क्र. ITEM NO.; मद संख्या NO. OF ITEM 001

शीर्षक/TITLE

COUPLING UPPER

ड्राइंग क्र./DRAWING NO. 5062994

पुन. REV. 14

पृष्ठ क्र./SHT. NO.01 पृष्ठों की संख्या/NO. OF SHT.01

REV.	DATE	ALTERED	REV.	DATE	ALTERED	REV.	DATE	ALTERED	REV.	DATE	ALTERED
		CHECKED			CHECKED			CHECKED			CHECKED
		APPROVED			APPROVED			APPROVED			APPROVED
ZONE			ZONE			ZONE			ZONE		

THE INFORMATION ON THIS DOCUMENT IS THE PROPERTY OF BHARAT HEAVY ELECTRICALS LIMITED.
IT MUST NOT BE USED DIRECTLY OR INDIRECTLY IN ANY WAY DETRIMENTAL TO THE INTEREST OF THE COMPANY.

5062994-R13-S01 REF. DRG. NO.

SIGN AND DATE

INVENTORY NO.

A2

RELEASED

23/08/2013