FIRST ANGLE PROJECTION

(ALL DIMENSIONS ARE IN mm)

DRG. NO. 5097258

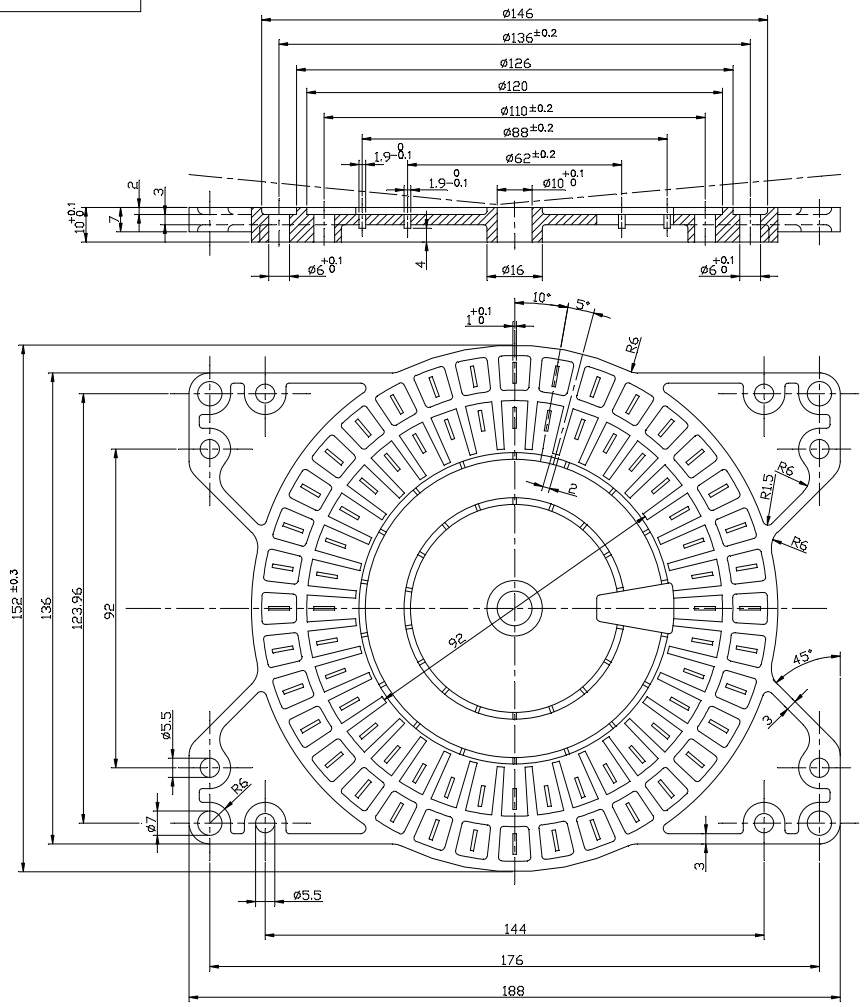

DEFLECTION MAX. 1 mm IN DIRECTION IS PERMISSIBLE

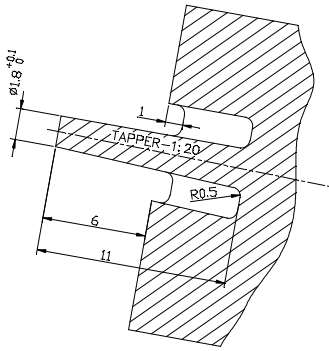

SECTION A–B
SCALE 5:1

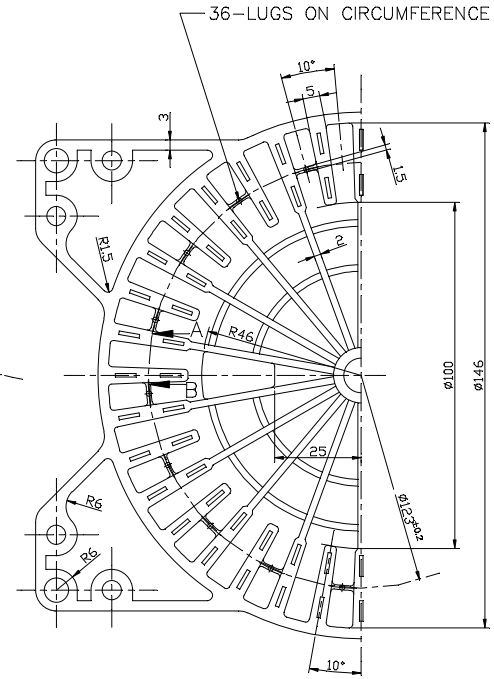

RADIUS NOT SHOWN = R1

SLOT OF 1X6mm MUST BE ACCURATE, FREE FROM BURRS & FLUSHES.

VAR00	REMARKS	VAR. NO.	ITEM NO.	DESCRIPTION	STD	DRAWING NO.	IT.NO. / VAR.	MATL. CODE / MATL. SPCN.	UNIT WT. / QTY.	ZONE
			001	GLASSFIBRE REINFORCED PLASTIC MOULDING				SG-10015	KG. 0.15 / 001	

28 → CARD TYPE-3 | 28 → CARD TYPE-1 | 28 → CARD TYPE-2

ADDITIONAL INFORMATION

STATUS OF DRAWING M

DISTRIBUTION OF PRINTS

O/C	SWM	TCX
1	3	1

उत्पाद का प्रकार या ग्राहक/परियोजना का नाम
TYPE OF PRODUCT OR NAME OF CUSTOMER/PROJECT

ON LOAD TAP CHANGER

भारत हेवी इलेक्ट्रिकल्स लिमिटेड भोपाल
BHARAT HEAVY ELECTRICALS LTD. BHOPAL

	नाम/NAME	हस्ता/SIGN.	दि./DATE	वेरि की संख्या NO. OF VAR.
ड्राया DRN.	AKU	Sd/-	07.05.97	00
जाँचा CKD.	AKI	Sd/-	09.05.97	
स्वीकृत APPD.	YUP	Sd/-	09.05.97	

REV.	DATE	
		ALTERED
		CHECKED
		APPROVED

REV.	DATE	
		ALTERED
		CHECKED
		APPROVED

REV.	DATE	
01	29.12.01	ALTERED AKU
		CHECKED SKP
		APPROVED SK

ZONE | ZONE | ZONE

DRG. REDRAWN.

(DCA. NO. 11150)

विभाग DEPT.	उन.टल.नाप की त्रुटि UNTOL. DIMS. GR.	अनुपात SCALE	भार कि. ग्रा. WEIGHT (K.G.)	उसे. ड्राईंग का संदर्भ REF. TO ASSY.	मद संख्या ITEM NO.	मद संख्या NO. OF ITEM
SWE	M	1:1	–	5011482,5012155,156	–	001
कोड CODE 409	AA0230208					

शीर्षक/TITLE

CONTACT PLATE

ड्राईंग क्र./DRGAWING NO. 5097258 — पुन./REV. 01

पृष्ठ क्र/SHTNO. 01 — पृष्ठों की संख्या / No.OF SHT 01

THE INFORMATION ON THIS DOCUMENT IS THE PROPERTY OF BHARAT HEAVY ELECTRICALS LIMITED.
IT MUST NOT BE USED DIRECTLY OR INDIRECTLY IN ANY WAY DETRIMENTAL TO THE INTEREST OF THE COMPANY.

5097258–R00–S01 REF. DRG. NO.

SIGN. & DATE

INVENTORY NO.