FIRST ANGLE PROJECTION

ALL DIMENSIONS ARE IN mm

DRG. NO. 5220971

TOOL LIST		
ITEM	TOOL NO.	DESCRIPTION
–	1463138	HOLDING FIXTURE FOR 32.5 R
–	1463544	GRAVITY DIE CASTING
–	1520249	REAMER 18.1 H11
–	1520271	PLUG GAUGE 18.1 H11

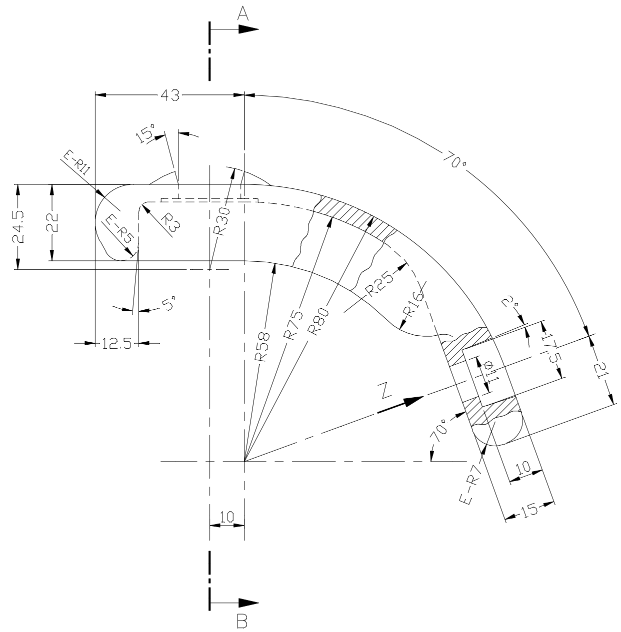

SECTION A–B

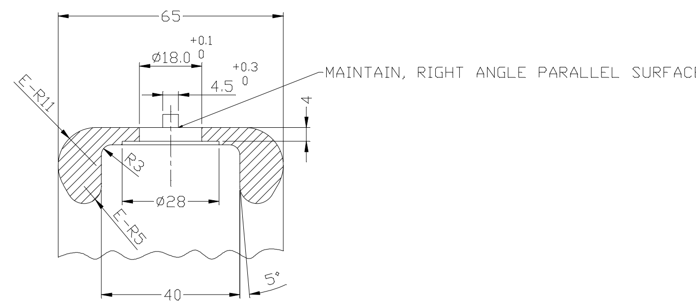

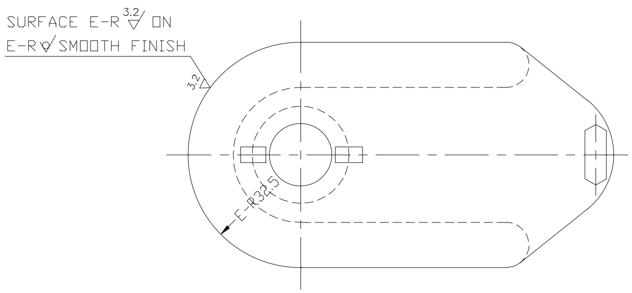

VIEW 'Z'

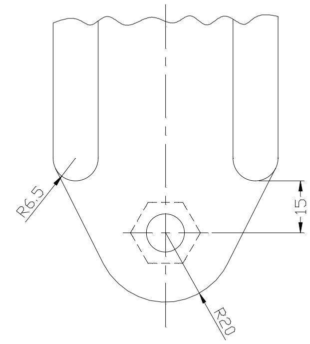

(3.2)

				NAVAL BRASS GRAVITY DIE CASTING				BP19996			0.80 / 001		
59 VAR.00 64	65 REMARKS 75	78 79 VAR. NO.	25 ITEM NO. 27	29 DESCRIPTION 58	59 STD	60 DRAWING NO. 77	29 IT.NO. 31 / 32 VAR. 33	34 MATL. CODE 45 / 46 MATL. SPCN. 54	55 A/C	56 57 UNIT	58 UNIT WT. 65 / 68 QTY. 71	72 GS	ZONE

28 → CARD TYPE-3 | 28 → CARD TYPE-1 | 28 → CARD TYPE-2

ADDITIONAL INFORMATION			उत्पाद का प्रकार या ग्राहक/परियोजना का नाम TYPE OF PRODUCT OR NAME OF CUSTOMER/PROJECT	ON LOAD TAPCHANGER
STATUS OF DRAWING				
DISTRIBUTION OF PRINTS				
SWE	SWM	TCX		
1	3	1		

बीएचईएल BHEL

भारत हेवी इलेक्ट्रिकल्स लिमिटेड
भोपाल
BHARAT HEAVY ELECTRICALS LTD.
BHOPAL

	नाम/NAME	हस्ता./SIGN.	दिनांक/DATE	वे रि.की संख्या NO. OF VAR.
बनाया DRN.	P.V.SHINDE	Sd/–	07.1.77	
जाँचा CKD.	BSR	Sd/–	23.1.77	
स्वीकृत APPD.	BSS	Sd/–	27.1.77	–

REV.	DATE	ALTERED / CHECKED / APPROVED	REV.	DATE	ALTERED / CHECKED / APPROVED	REV.	DATE	ALTERED / CHECKED / APPROVED
						06	05.1.05	DRG. REDRAWN. (DCA NO. 21840)

विभाग DEPT	अन.टाल.नाप की श्रेणी UNTOL. DIMS. GR.	अनुपात SCALE	भार (कि.ग्रा.) WEIGHT(K.G.)	असे.ड्राईंग का संदर्भ REF. TO ASSY. DRG.	मद क्र. ITEM NO.	मद संख्या NO. OF ITEM
SWE, कोड CODE 409		1:1		5044363	–	–

शीर्षक/TITLE: CONNECTION LUG

ड्राईंग क्र./DRAWING NO. 5220971 — पुन. REV. 06

पृष्ठ क्र./SHT. NO.01 — पृष्ठों की संख्या/NO. OF SHT.01

A2 SIZE

THE INFORMATION ON THIS DOCUMENT IS THE PROPERTY OF BHARAT HEAVY ELECTRICALS LIMITED.
IT MUST NOT BE USED DIRECTLY OR INDIRECTLY IN ANY WAY DETRIMENTAL TO THE INTEREST OF THE COMPANY.

REF. DRG. NO.

SIGN AND DATE

INVENTORY NO.