[redacted]

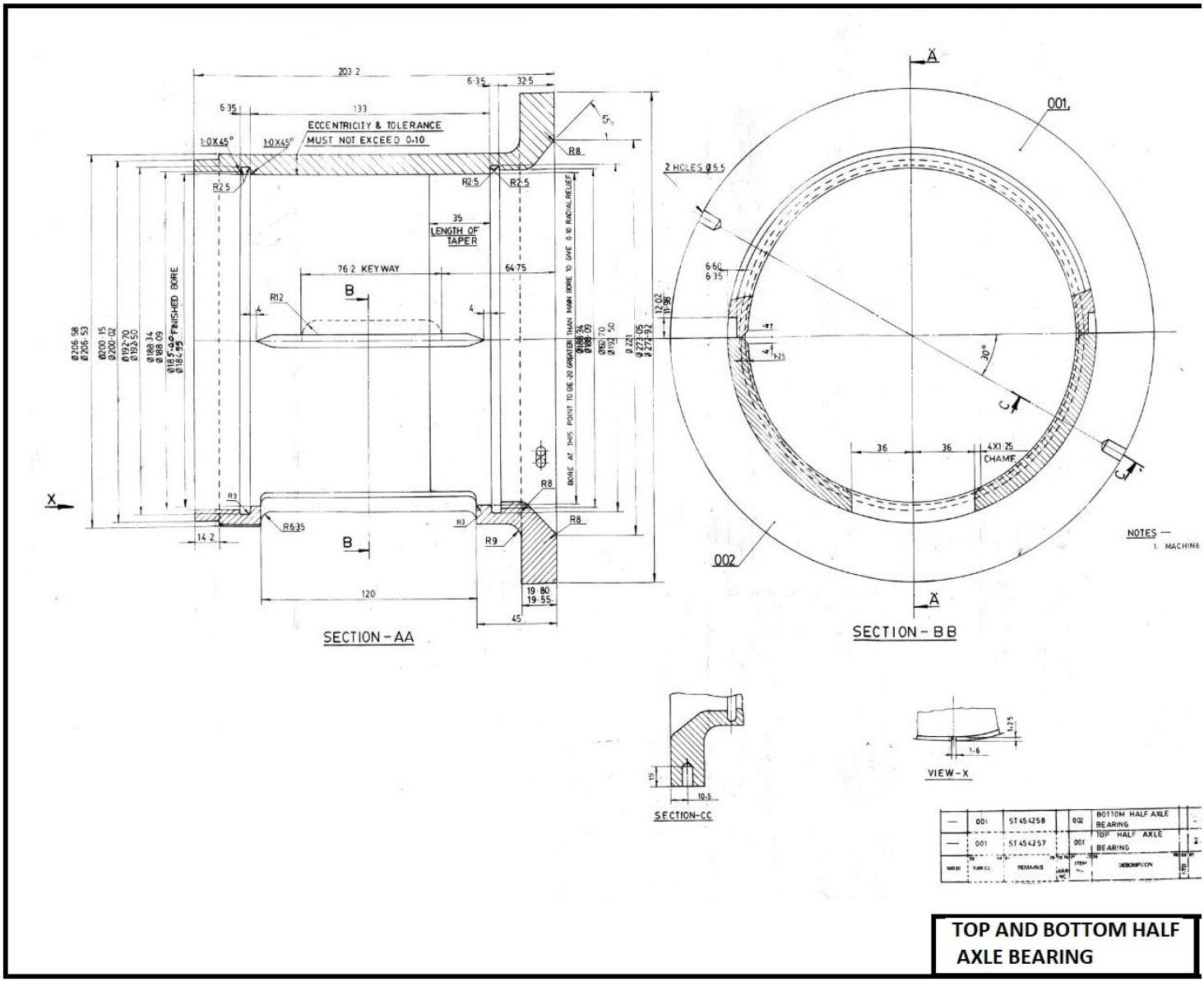

TOP AND BOTTOM HALF AXLE BEARING

[redacted]