FIRST ANGLE PROJECTION

(ALL DIMENSIOMS ARE IN mm)

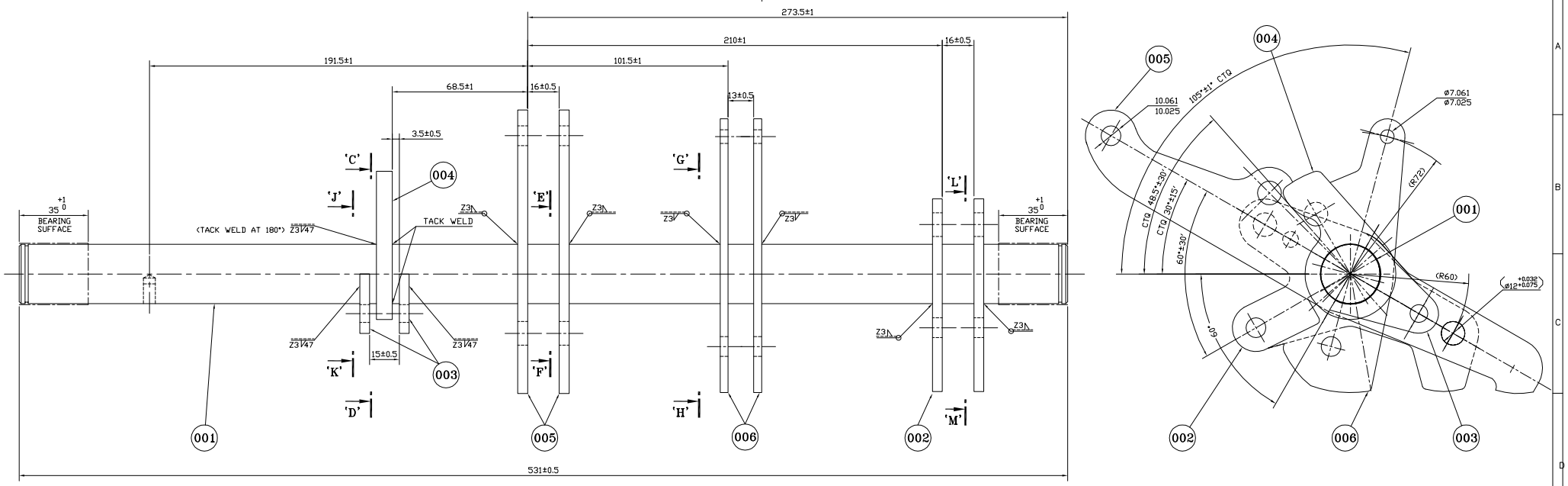

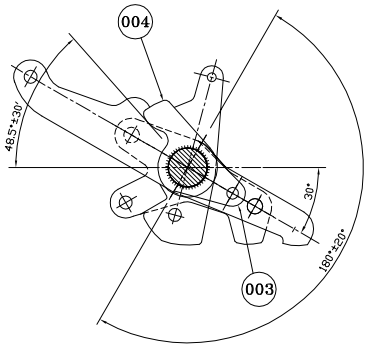

SECTION J-K

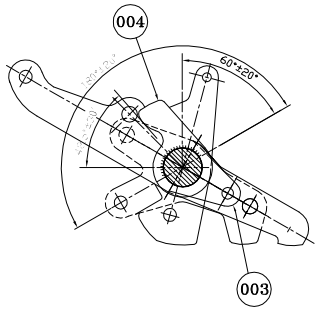

SECTION C-D

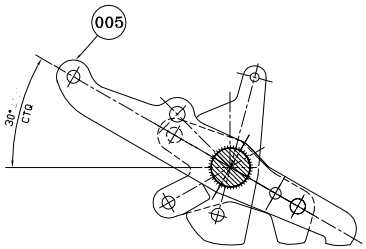

SECTION E-F

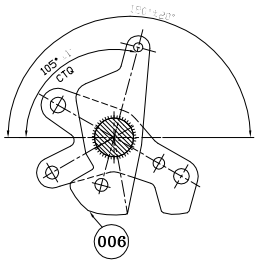

SECTION G-H

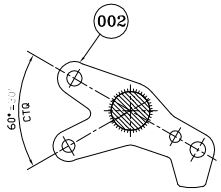

SECTION L-M

NOTE :-

1. HOLES ON LEVERS OF THE SAME PAIR BE CONCENTRIC WITHIN 0.1.
2. TRUENESS OF THE SHAFT AFTER WELDING MUST BE MAINTAINED WITHIN±0.5
3. BEARING SURFACE TO BE MASKED WHILE MANGANESE PHOSPHATING.
4. WELDING SHALL BE GRADE IV AS PER AA 0622101 PROPER WELDING SEQUENCE SHALL BE FOLLOWED TO AVOID DISTORTION.
5. WELDING SHALL BE DONE ON FIXTURE. JOB TO BE REMOVED FOR ±1xTURE AFTER COMPLETE COOLING.
6. MANUFACTURER IDENTIFICATION MARK & PO NO. TO BE PROVIDED ON ITEM NO-004 BEFORE WELDING.

FINISH :- MANGANESE PHOSPHATING TO AA 0673616/ZINC PLATING PASSVATING TO AA0673603 & AA0673604 TO 0.013 TK.

TOOL NO. 1492825 - WELDING FIXTURE

BP CODE :- VAR.00-BP 9089330569

			006	LEVER							KG.	0.260			
												001			
			005	LEVER							KG.	0.300			
												001			
			004	LEVER							KG.	0.240			
												001			
			003	LEVER							KG.	0.160			
												001			
			002	LEVER							KG.	0.500			
												001			
			001	SHAFT							KG.	2.947			
												001			
59 64 VAR00	65 75 REMARKS	78 79 VAR. NO.	25 27 ITEM NO.	29 58 DESCRIPTION	59 STD	60 77 DRAWING NO.	29 31 IT.NO.	34 45 MATL. CODE	55 A C	56 57 UNIT	58 65 UNIT WT.	72 GS	ZONE		
							32 33 VAR.	46 54 MATL. SPCN.			68 71 QTY.				

28 —— CARD TYPE-3 28 —— CARD TYPE-1 28 —— CARD TYPE-2

ADDITIONAL INFORMATION

STATUS OF DRAWING

DISTRIBUTION OF PRINTS
OFFICE COPY -1

उत्पाद का प्रकार या ग्राहक/परियोजना का नाम
TYPE OF PRODUCT OR NAME OF CUSTOMER/PROJECT

GVM-36

भारत हेवी इलेक्ट्रिकल्स लिमिटेड भोपाल
BHARAT HEAVY ELECTRICALS LTD. BHOPAL

	नाम/ NAME	हस्ता./ SIGN	दिनांक/DATE	वे.रि. की संख्या NO. OF VAR.
बनाया DRN.	G.PRASAD			
जाँचा CKD.	P.S.SONKAR			
अनुमोदित APPD.	D.K.DIKSHIT			

विभाग DEPT. SWE | अन.टल. नाप की श्रेणी UNTOL. DIMS. GR. | अनुपात SCALE 1:1 & 1:2 | भार (कि.ग्रा.) WEIGHT (KG.) 5.280 | उसे. ड्राइंग का सैंडर्स REF. TO ASSY. DRG. | मद क्र. ITEM NO. | मद संख्या NO. OF ITEM

कोड CODE 409

वीर्षक/ TITLE **MECHANISM SHAFT**

ड्राइंग क्र./DRAWING NO. | पुन./REV.

पृष्ठ क्र./ SHT. NO.01 | पृष्ठों की संख्या/NO. OF SHT.01

REV.	DATE	ALTERED / CHECKED / APPROVED	REV.	DATE	ALTERED / CHECKED / APPROVED	REV.	DATE	ALTERED / CHECKED / APPROVED	REV.	DATE	ALTERED / CHECKED / APPROVED	REV.	DATE	ALTERED / CHECKED / APPROVED
ZONE			ZONE			ZONE			ZONE			ZONE		

A1

THE INFORMATION ON THIS DOCUMENT IS THE PROPERTY OF BHARAT HEAVY ELECTRICALS LIMITED.
IT MUST NOT BE USED DIRECTLY OR INDIRECTLY IN ANY WAY DETRIMENTAL TO THE INTEREST OF THE COMPANY.