THE INFORMATION ON THIS DOCUMENT IS THE PROPERTY OF BHARAT HEAVY ELECTRICALS LIMITED. IT MUST NOT BE USED DIRECTLY OR INDIRECTLY IN ANY WAY DETRIMENTAL TO THE INTEREST OF THE COMPANY.

FIRST ANGLE PROJECTION

(ALL DIMENSIONS ARE IN mm.)

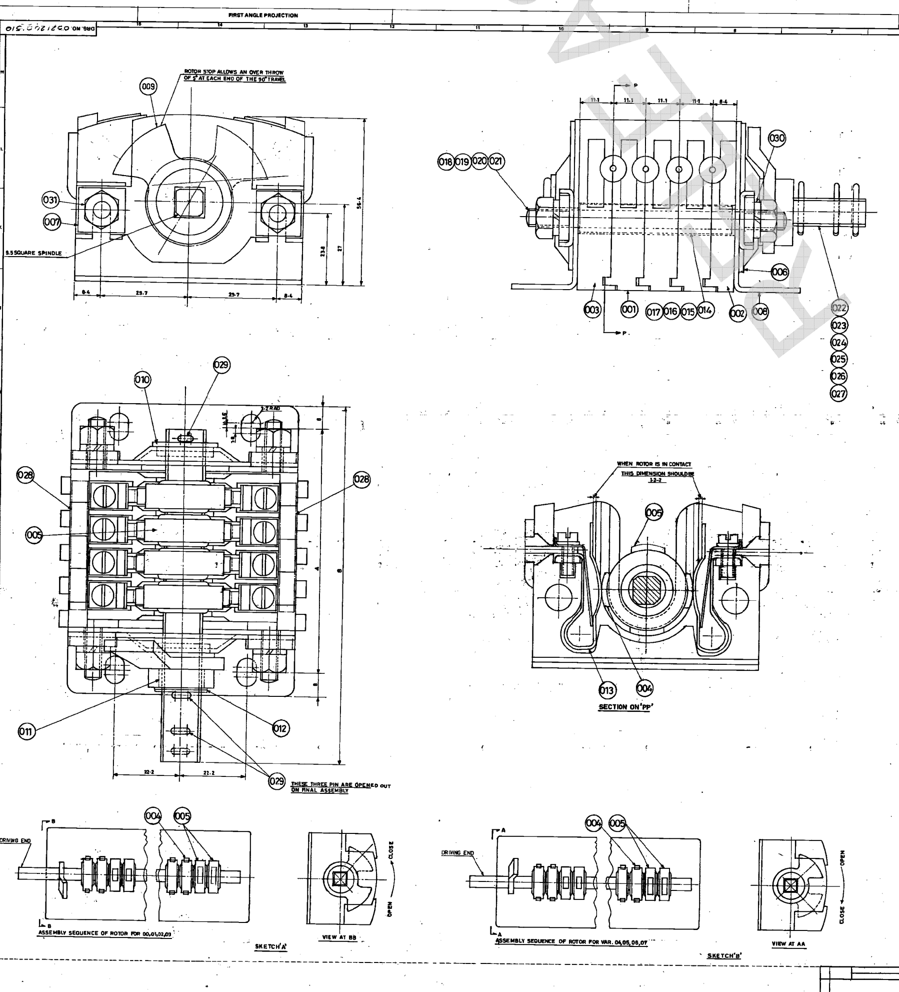

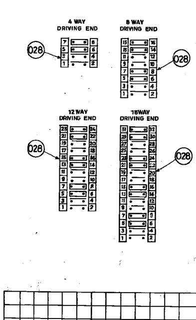

REFERENCE TABLE FOR AUX. SWITCH						
NO. OF WAYS	VAR.	STYLE NO.	TYPE OF BREAKER	POSITION OF CONTACT	DIMENSION A	DIMENSION B
4	00	943799	BV	2 N.O. 2 N.C.	81	118
8	01	943800	BV	4 N.O. 4 N.C.	125.5	162.5
12	02	943801	BV PVN-36 HLC, VN	6 N.O. 6 N.C.	170	207
16	03	943802	LM VN HLC	8 N.O. 8 N.C.	214.5	251.5
8	04	943803	BVM	4 N.O. 4 N.C.	125.5	162.5
12	05	943804	BVM	6 N.O. 6 N.C.	170 (NOT TRIED)	207
16	06	943805	VN-36 VN-12 PVN-12	8 N.O. 8 N.C.	214.5	291.5
12	07	943806	VN 12	6 NO. 6 NC.		

RATING —

FOR A.C. VOLTAGE

- NORMAL VOLTAGE - 230 V-AC
- NORMAL CURRENT - 15-A
- BREAKING CURRENT - 15-A
- MAKING CURRENT - 15-A

FOR D.C. VOLTAGE

- NORMAL VOLTAGE - 230V-D.C.
- RESISTIVE CURRENT - 10-A
- INDUCTIVE CURRENT - 4.5-A

MCA NOTE

1. POSITION OF STANDARD ROTOR AND SPECIAL ROTOR IN ALL VARIATION ARE FIXED. IN CASE OF NONSTANDARD REQUIREMENT OF ROTOR IT SHOULD BE MENTIONED IN ENGG. SPEC. & SEPARATELY ORDERED.
2. IN CASE PASSING CONTACT IS REQUIRED ORDER SPECIAL ROTOR TO DRG. D9277143 COL. A AND OMIT CORRESPONDING ITEMS.

VAR. 07	VAR. 06	VAR. 05	VAR. 04	VAR. 03	VAR. 02	VAR. 01	VAR. 00	REMARKS	ITEM NO	DESCRIPTION	DRAWING NO.	ST. NO / VAR.	MATL. CODE / MATL. SPECN.
004	004	004	004	004	004	004	004		031	HEX. NUT M8 PB			AA7151115016
004	004	004	004	004	004	004	004		030	WASHER SPRING SC B6 ST.	-		AA7164002045
003	003	003	003	003	003	003	003		029	PIN SPLIT 2.5X20 STEEL			AA7171089088
001	001	001	001	001	001	001	001	ST924875	028	MARKING LABEL	45085001686	001	
001	-	-	-	-	-	-	-		027	CENTRE SPINDLE 12 WAY	B9402077	011	
-	001	-	-	-	-	-	-		026	CENTRE SPINDLE (16 WAY)	B9402077	010	
-	-	-	-	001	-	-	-		025	CENTRE SPINDLE (16 WAY)	B9402077	009	
-	-	001	-	-	001	-	-	ST915080	024	CENTRE SPINDLE (12 WAY)	B9402077	003	
-	-	-	001	-	-	001	-	ST918079	023	CENTRE SPINDLE (8 WAY)	B9402077	002	
-	-	-	-	-	-	-	001	ST915078	022	CENTRE SPINDLE (4WAY)	B9402077	001	
-	002	-	-	002	-	-	-	ST927827	021	FIXING STUD (16 WAY)	D9275009	009	
002	-	002	-	-	002	-	-	ST916627	020	FIXING STUD (12 WAY)	D9275009	013	
-	-	-	002	-	-	002	-	ST916626	019	FIXING STUD (8 WAY)	D9275009	012	
-	-	-	-	-	-	-	002	ST916624	018	FIXING STUD (4WAY)	D9275009	010	
-	002	-	-	002	-	-	-	~~ST897826~~	017	7 I/D × 1 TK. × 185 PVC SLEEVE (L/V)	~~D9275008~~	006	AA 22521
002	-	002	-	-	002	-	-	~~ST916622~~	016	7 I/D × 1TK. × 140.5 PVC SLEEVE (L/V)	~~D9275008~~	005	AA 22521
-	-	-	002	-	-	002	-	~~ST907366~~	015	7 I/D × 1 TK × 96 PVC SLEEVE (L/V)	~~D9275008~~	004	AA 22521
-	-	-	-	-	-	-	002	~~ST907364~~	014	7 I/D × 1 TK × 51.5 PVC SLEEVE (L/V)	~~D9275008~~	002	AA 22521
024	032	024	016	032	024	016	008	ST916619	013	ASSY. OF FIXED CONTACT	B9402112	COL.B	
002	002	002	002	002	002	002	002	TO BE USED IN ADDITION TO IT. 11 WHEN REQD.	012	WASHER (ST907260)	B9400068	001	
001	001	001	001	001	001	001	001	ST907275	011	SPACING BUSH	B9400084	001	
002	002	002	002	002	002	002	002	ST915095	010	INSERT	B9402107	001	
001	001	001	001	001	001	001	001	ST902402	009	ROTOR STOP	D9277124	001	
002	002	002	002	002	002	002	002	ST902401	008	FIXED END PLATE	D9277123	001	
004	004	004	004	004	004	004	004	ST907274	007	LOCKING PLATE	B9400083	001	
002	002	002	002	002	002	002	002	ST915333	006	REMOVABLE END PLATE	E9202058	001	
002	002	002	002	002	002	002	001	ST915097	005	ROTOR LONGER	B9402109	COL.A	
010	014	010	008	014	010	006	003	ST302400	004	ROTOR STANDARD	D9277122	COL.A	
001	001	001	001	001	001	001	001	ST915332	003	END PLATE	E9202057	001	
001	001	001	001	001	001	001	001	ST915331	002	END PLATE	E9202056	001	
011	015	011	007	015	011	007	003	ST915665	001	SIDE PLATE	F9127054	001	

CARD TYPE-3 / CARD TYPE-1 / CARD TYPE-2

ADDITIONAL INFORMATION

STATUS OF DRAWING

DISTRIBUTION OF PRINTS
OFFICE COPY - 2
SW'GEAR SHOPS - 4
TCX DIVN - 1

REV. 01 DATE 26-3-98 ALTERED A.R.G. CHECKED
FIES SEQUENCE REARRANGED IN T. 028. FOR VM SWGR, 12 WAY AUX. SWITCH ADDED IN VAR 02. DRG REF. FOR ITS. 014 TO 017 DELETED.

TYPE OF PRODUCT OR NAME OF CUSTOMER/PROJECT: 12/36 kV. SWGR

BHARAT HEAVY ELECTRICALS LIMITED BHOPAL

DRN. SKP — CHD. SMK — APPD. M.A.S

DEPT. SWE — CODE 209 — SCALE 2.5:1

TITLE: ARRGT. & LIST OF AUX. SWITCH
(THIS DRG SHOWS A 4 WAY SWITCH AS A TYPICAL EXAMPLE)

DRAWING NO. 0521 2001510 — REV. 01

SIZE A0

0196001250

02/05/2013