FIRST ANGLE PROJECTION

(ALL DIMENSIONS ARE IN mm)

DRG. NO. 1 11818 41000

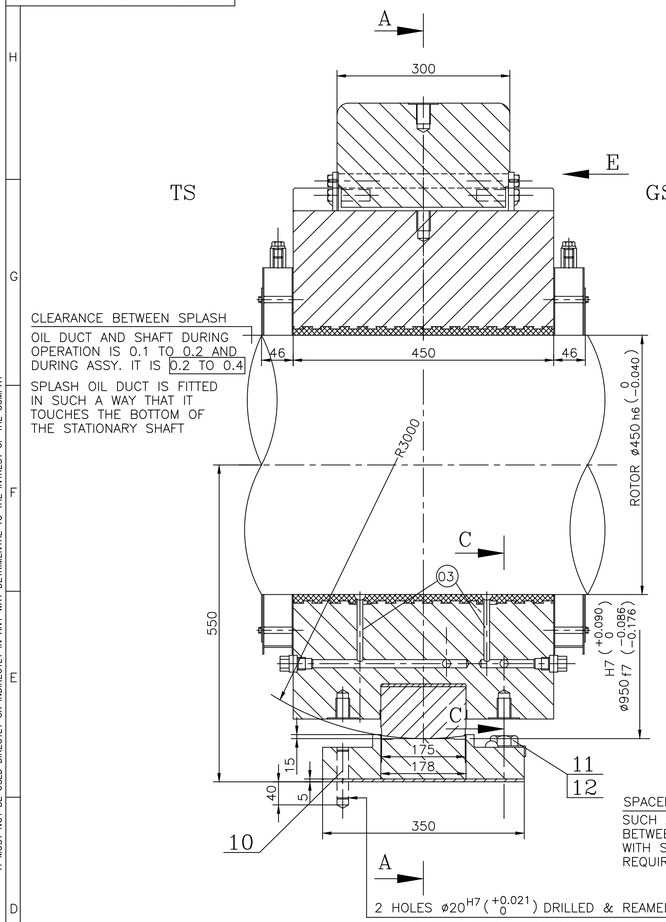

SECTION BB

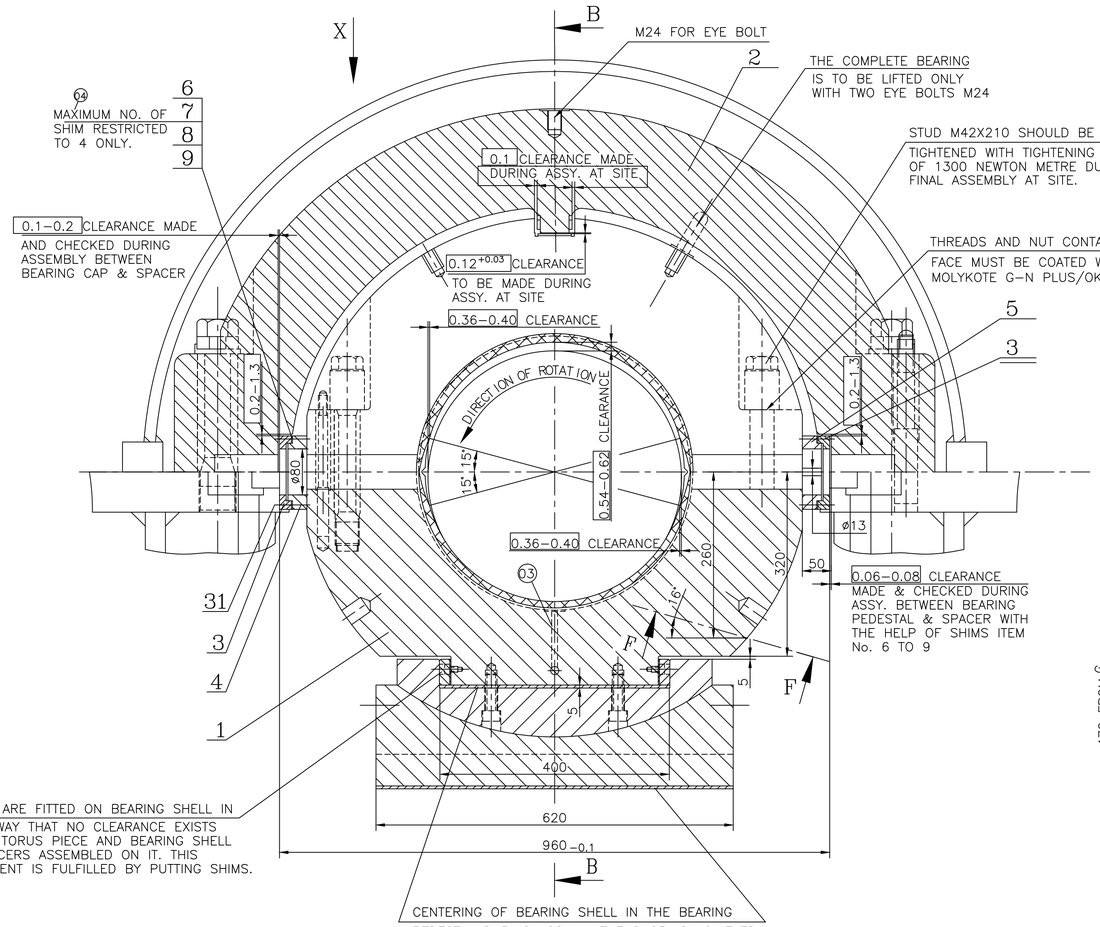

SECTION AA

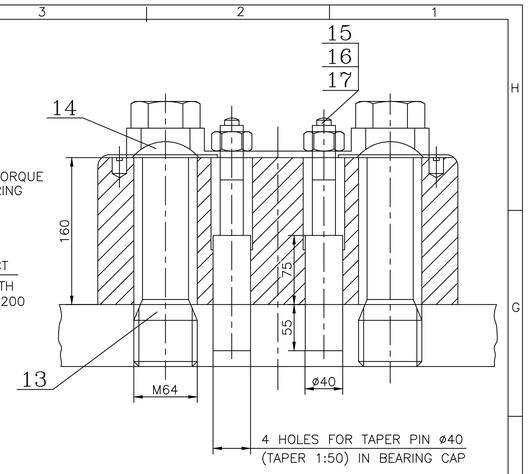

SECTION DD

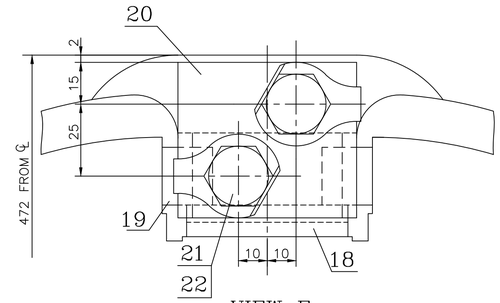

VIEW E

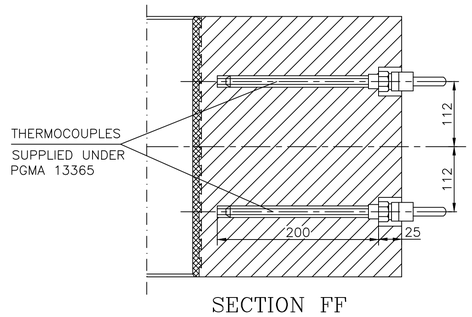

SECTION FF
(TURNED)

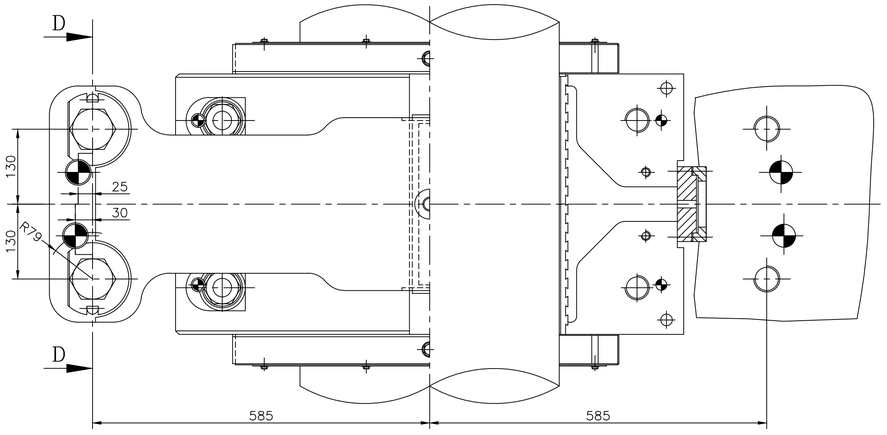

VIEW X VIEW OF LOWER HALF OF JOINT PLANE

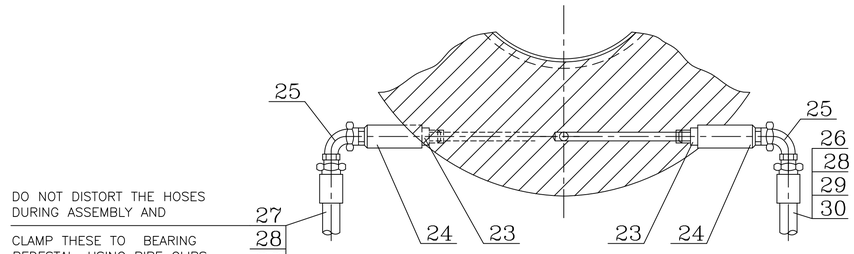

DO NOT DISTORT THE HOSES DURING ASSEMBLY AND

CLAMP THESE TO BEARING PEDESTAL, USING PIPE CLIPS AT ABOUT 3 POINTS, MINIMUM BEND ≥ RADIUS 200 MM.

SECTION CC

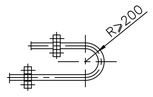

TECHNICAL REQUIREMENTS:−

1. THE CLEARANCE BETWEEN SHAFT AND BEARING SHELL SHALL BE MAINTAINED AS GIVEN IN SECTION AA
2. ALL UNUSED SHIMS MUST BE SUPPLIED LOOSE TO SITE.
3. TORUS PIECE TO BE FINISH MACHINED AFTER FITTING IT WITH BEARING SHELL ALONG WITH 5mm SHIM.
4. IDENTIFICATION ACCORDING TO HW 0400397.
5. DIMENSIONS WITHIN ▭ ARE TO BE CHECKED DURING ASSEMBLY.
6. CONSERVATION OF BEARING IS TO BE CARRIED OUT AS PER ST33004.

SUPERSEDES OLD DRAWING UNDER SAME NUMBER

GMS No. / C.B.O.M. − NO.			STATUS OF DRG
11181841000			U
AGREED DEPT.	NAME	SIGN	DATE
S.T.T.	A.SHUKLA	SD/−	5.4.99

GRADE OF UNTOL.DIM
M/CG.−℄/M/F AA0230208
WELDING−A/B/℄/D AA0621104
GAS CUTTING−'T3'AA0621101

TYPE OF PRODUCT STEAM TURBINE
OR
NAME OF CUSTOMER/PROJECT

BHARAT HEAVY ELECTRICALS LTD.
RANIPUR, HARDWAR

	NAME	SIGN	DATE	NO. OF VAR
DRN	S.P.S.S	SD/−	16.2.99	—
CHD	A. SHAH	SD/−	25.2.99	
APPD	A.K.JAIN	SD/−	06.4.99	73 74

REV	DATE	ALTERED	CHECKED
04	6.5.10	MANOJ	DKRAY
03	9/7/07	T.S.B.	RPS
02	4/2/03	R.K.N.	A.JAIN

CHANGES MADE AS PER CHANGE ADVICE.
C/A NO. STE−10−F0087

C/A NO.STE−07−F0179
DRAIN 5 MM IN JOP LINE DELETED
REFER SECTION AA/ BB

DRAWING SUPERSEDED AND DEPOSITED ON SERVER.
C/A NO. STE−03−F243

DEPT	SCALE	WEIGHT (KG)	REF. TO ASSY. DRG.	ITEM No.	NO. OF ITEMS
STE	1:5	2394.0	—	—	75 77
CODE 4011					

TITLE : ARRANGEMENT OF JOURNAL BEARING (ø450X450)

CARD CODE

DRAWING NO. 1 11818 41000 (7 22 23 24)

SHEET No. 01 No. OF SHEETS 01

A1 SIZE

THE INFORMATION ON THIS DOCUMENT IS THE PROPERTY OF BHARAT HEAVY ELECTRICALS LIMITED.
IT MUST NOT BE USED DIRECTLY OR INDIRECTLY IN ANY WAY DETRIMENTAL TO THE INTREST OF THE COMPAY

BR341000

INVENTORY NO | SIGN. AND DATE | REF. DRG. NO. 1 11818 41000 WITH NO.(ø450 TO 450)