FIRST ANGLE PROJECTION

(ALL DIMENSIOMS ARE IN mm)

DRG. NO. 1 721 10 10277

THE INFORMATION ON THIS DOCUMENT IS THE PROPERTY OF BHARAT HEAVY ELECTRICALS LIMITED.
IT MUST NOT BE USED DIRECTLY OR INDIRECTLY IN ANY WAY DETRIMENTAL TO THE INTEREST OF THE COMPANY.

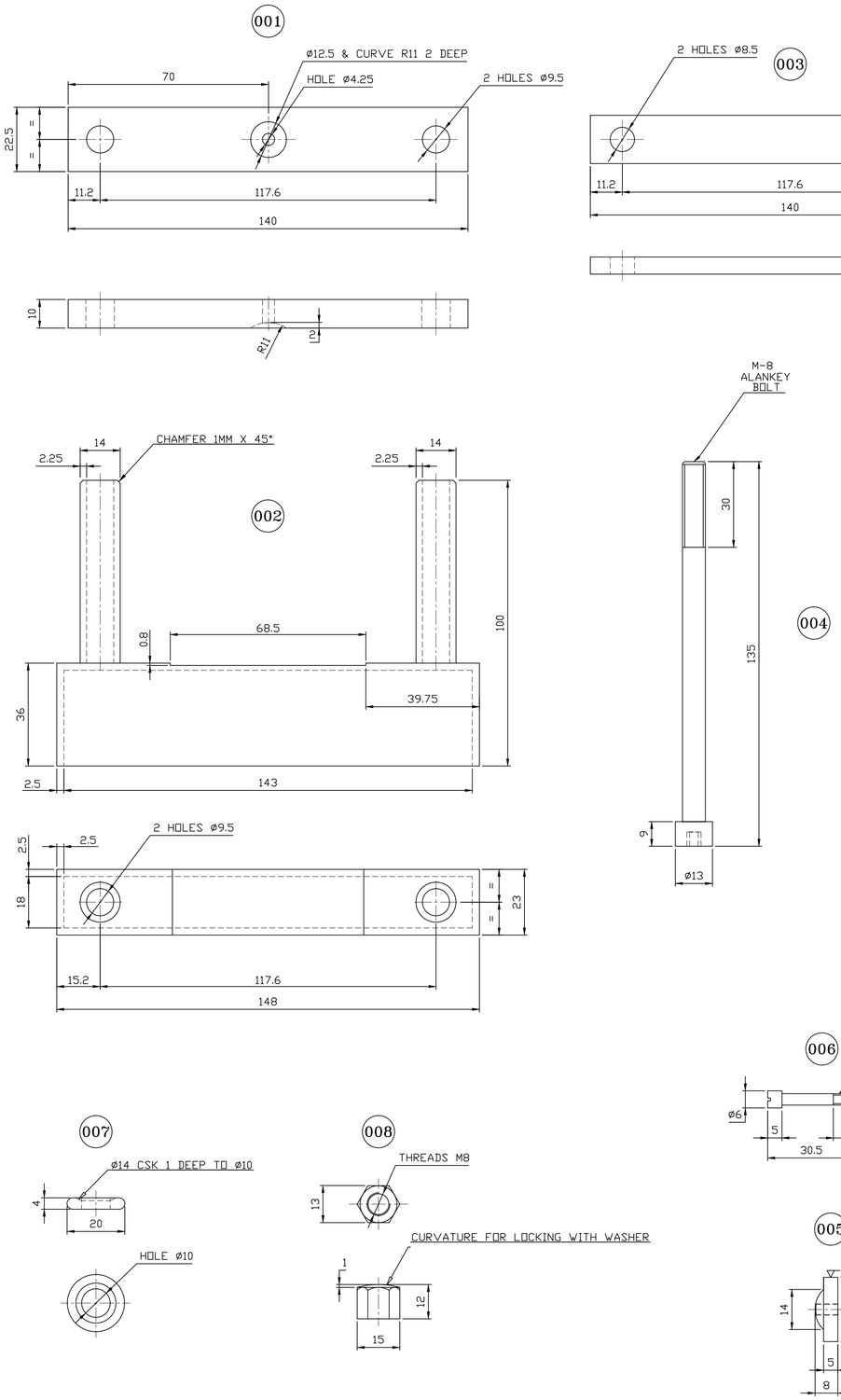

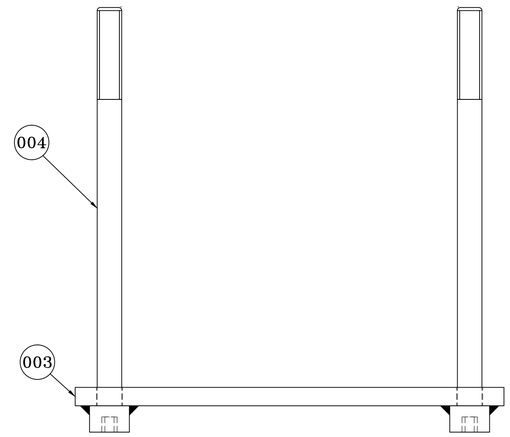

ASSY. OF 003 & 004

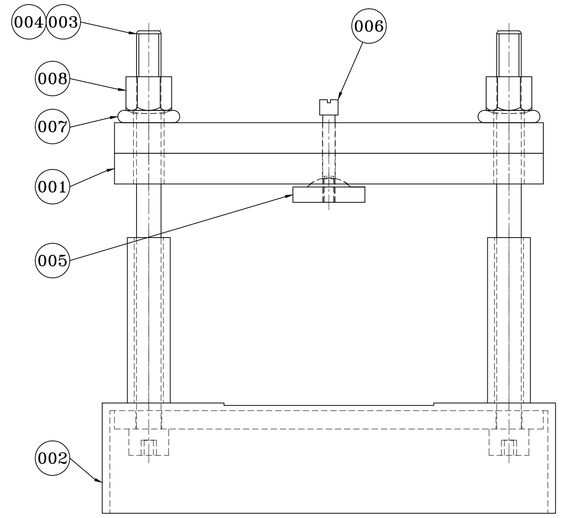

VAR.00

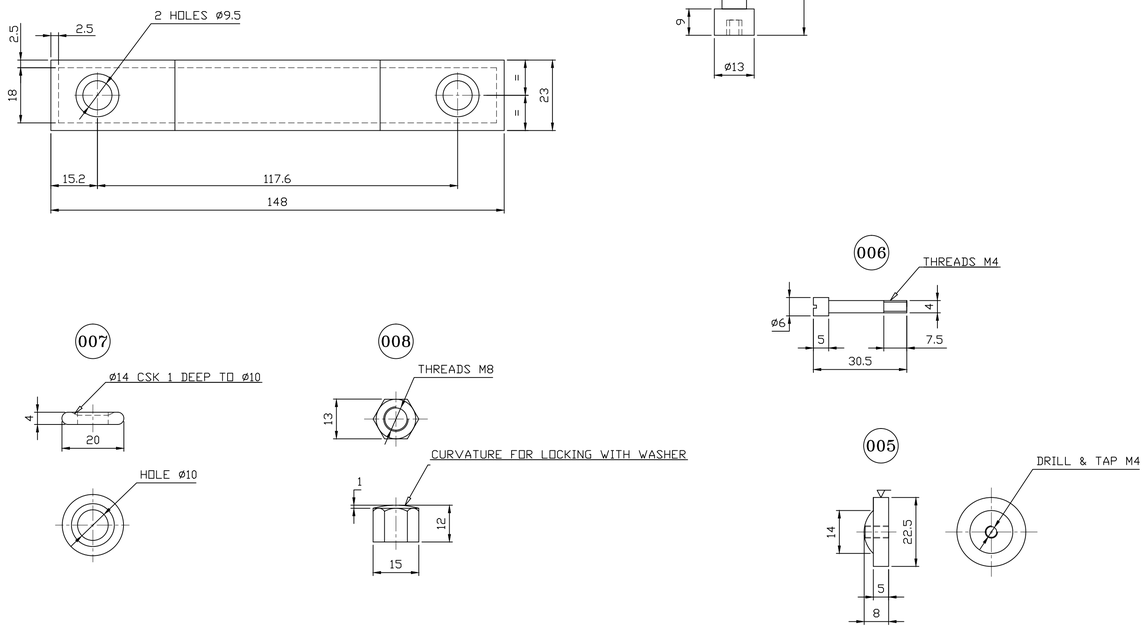

NOTES :-

1. CLAMP ASSY SHOULD BE TESTED FOR 20N-M TORQUE.
2. ITEM 003 & 004 TO BE WELDED AS SHOWN BEFORE PLATING.
3. ITEMS 005, 006, 007, 008 & ASSY OF ITEM 003&004 TO BE ZINC PLATED & PASSIVATED TO PrS AA0673603 & AA0673604 RESP'Y (0.13TK).
4. ITEM 002 NYLON 6 MOULDING WITH 30% GLASS SHOULD WITHSTAND 3 KV AC FOR 1 MIN WHEN CLAMP IS TIGHTENED WITH HEAT SINKS WITH A 25 MM INSULATING BLOCK IN BETWEEN.
5. ITEM 001 TO BE HARDENED AND TEMPERED TO ACHEIVE REQUIRED HARDNESS FOR CLAMPING PROPERTIES AS PER SL.NO 1 ABOVE.

STYLE CODE : BP9048097258

002			008	NUT HEX PM8-8.8. 13 A/F HIGH TENSILE ST				IS1367					
002			007	WASHER Ø20 BRT ST RD				AA10112				4 LG	
001			006	PIN Ø6 BRT ST RD				AA10112				32.5 LG	
001			005	PRESSURE PIN Ø25 BRT ST BAR				AA10112				8 LG	
002			004	ALLEN KEY BOLT M8-8.8 HIGH TENSILE ST				IS1367					
001			003	PLATE 6TKx17 BRT ST RD				AA10112				140 LG	
001			002	INSUL. TUBE (MOULDED) 30% GLASS FLD NYLON 6				BP22962					
002	EN24/EN31		001	BLOCK 10TKx23 HARD ST BAR				AA10501				140 LG	
59 64 VAR00	65 75 REMARKS	78 79 VAR. NO.	25 27 ITEM NO.	29 58 DESCRIPTION	59 STD	60 77 DRAWING NO.	29 31 IT.NO. 32 33 VAR.	34 45 MATL. CODE 46 54 MATL. SPCN.	55 A C	56 57 UNIT	58 65 UNIT WT. 68 71 QTY.	72 CG	ZONE

28 → CARD TYPE-3 28 → CARD TYPE-1 ISSEED:-

ADDITIONAL INFORMATION -

STATUS OF DRAWING M

DISTRIBUTION OF PRINTS
D.C. - 1
RFM - 4
TCX (RFM) - 1

उत्पाद का प्रकार या ग्राहक/परियोजना का नाम
TYPE OF PRODUCT OR NAME OF CUSTOMER/PROJECT

OIL RIG
M/S ONGC

भारत हेवी इलेक्ट्रिकल्स लिमिटेड भोपाल
BHARAT HEAVY ELECTRICALS LTD. BHOPAL

	नाम/ NAME	हस्ता/ SIGN	दिनांक/DATE	ये R. की संख्या NO. OF VAR.
बनाया DRN.	DSS		20.01.09	00
जाँचा CKD.	SA			
अनुमोदित APPD.	RKA			

विभाग DEPT. CEE
कोड CODE 407
उत्प.टन. माप की श्रेणी UNTDL. DIMS. GR. CG 06503
उत्पाद SCALE NTS
भार (कि.ग्रा) WEIGHT (K.G.) -
उसे. इ.डी.ग्र का संदर्भ REF. TO ASSY. DRG. -
मद सं. ITEM NO. -
मद संख्या NO. OF ITEM 008

शीर्षक/ TITLE
SCR HEAT SINK CLAMP

इ.डी.ग्र सं./DRAWING NO. 1 721 10 10277
पुन./REV. 02
पृष्ठ सं./ SHT. NO. 01 पृष्ठों की संख्या/ NO. OF SHT. 01

REV.	DATE	ALTERED / CHECKED / APPROVED	ZONE
01	29.9.09	ALTERED DSS; CHECKED SA; APPROVED RKA	ITEM 001- DIM 22.5 WAS 23; ITEM 004- DIM 135 WAS 139; ITEM 005- DIM 22.5 WAS 23.5; ITEM 006- DIM 30.5 WAS 32.5
02	09.10.09	ALTERED RSR; CHECKED RV; APPROVED RKA	ITEM 002- DIM 100 WAS 90 CHAMFER ADDED ON TUBE.

A1