FIRST ANGLE PROJECTION (ALL DIMENSIONS ARE IN mm)

FORM: DG 44(B)

DRAWING NO. 21142211051

COPYRIGHT AND CONFIDENTIAL
THE INFORMATION ON THIS DOCUMENT IS THE PROPERTY OF BHARAT HEAVY ELECTRICALS LIMITED
IT MUST NOT BE USED DIRECTLY OR INDIRECTLY IN ANY WAY DETRIMENTAL TO THE INTEREST OF THE COMPANY.

6.3 ALL OVER UNLESS OTHERWISE STATED

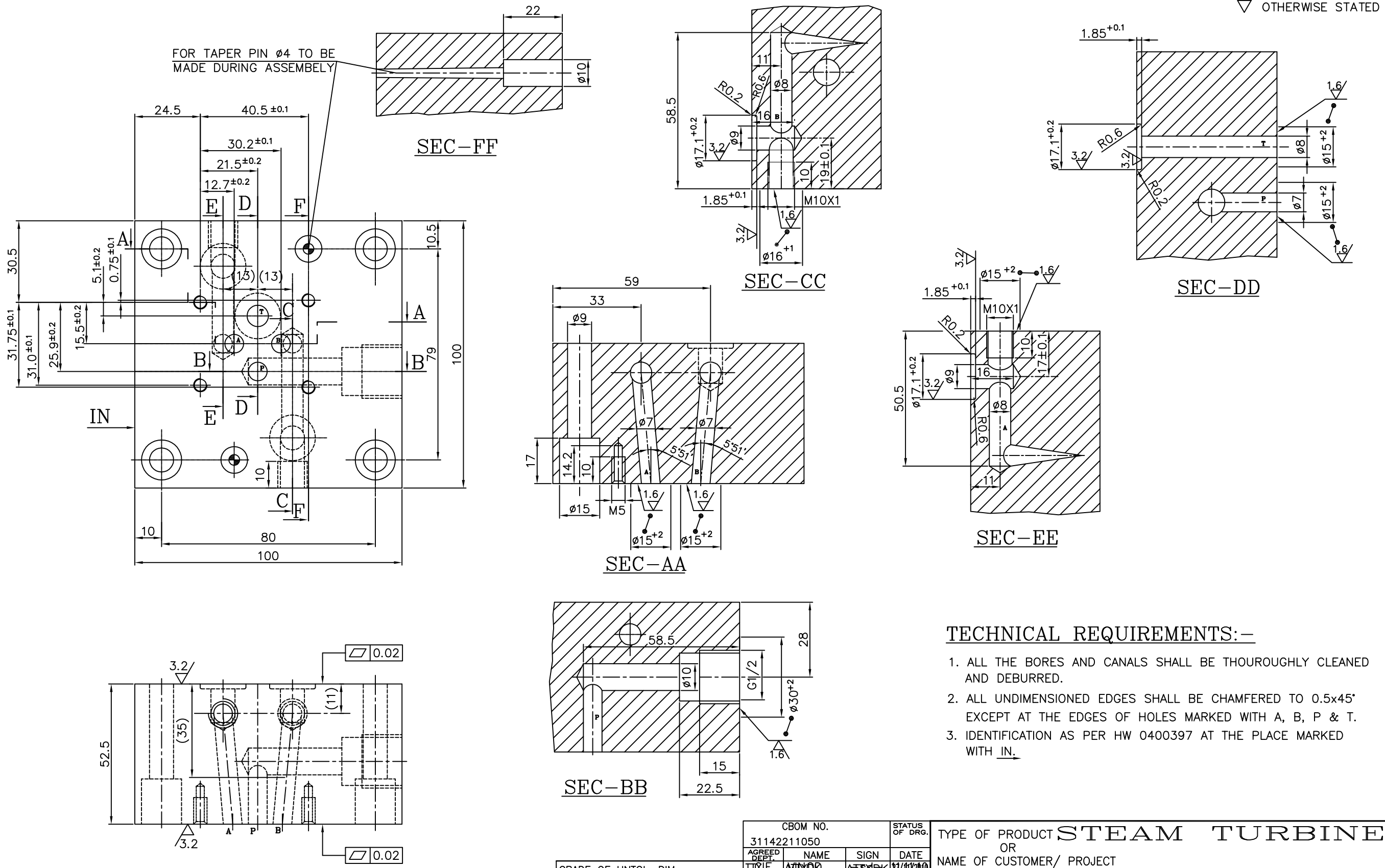

TECHNICAL REQUIREMENTS:-

1. ALL THE BORES AND CANALS SHALL BE THOUROUGHLY CLEANED AND DEBURRED.
2. ALL UNDIMENSIONED EDGES SHALL BE CHAMFERED TO 0.5x45° EXCEPT AT THE EDGES OF HOLES MARKED WITH A, B, P & T.
3. IDENTIFICATION AS PER HW 0400397 AT THE PLACE MARKED WITH IN.

CBOM NO.			STATUS OF DRG.
31142211050			
AGREED DEPT.	NAME	SIGN	DATE
TTCIE	ATTXOK	ATTXDK	27/11/2010

GRADE OF UNTOL. DIM.:-
M/CG- V/C/M/F AA 0230208
WELDING-A/B/C/D-AA621104
GAS CUTTING-'T3'AA0621101

REV.	DATE	ALTERED / CHECKED

TYPE OF PRODUCT STEAM TURBINE
OR
NAME OF CUSTOMER/ PROJECT

BHARAT HEAVY ELECTRICALS LTD.
HARDWAR

	NAME	SIGN	DATE	NO.OF VAR.
DRN	SSTENN	SSTENN	24/11/2010	
CHD	SSTENN	SSTENN	27/11/2010	
APD	ASTERCA	ASTERCA	27/11/2010	73, 74

DEPT.	SCALE	WEIGHT(Kg.)	REF. TO ASSY. DRG.	ITEM NO.	NO.OF ITEMS
STE CODE 4011	N.T.S.	6	31142211050	02	75, 77

TITLE
PROPORTIONAL VALVE WITH MANIFOLD

DRAWING NO. 21142211051

SHEET NO. 2 NO.OF SHEETS 2

SIZE A2

2-11422-11013 REF. DRG NO.

SIGN & DATE

INVENTORY NO.