DRG. NO. 2 40223 42007

THE INFORMATION ON THIS DOCUMENT IS THE PROPERTY OF BHARAT HEAVY ELECTRICALS LIMITED. IT MUST NOT BE USED DIRECTLY OR INDIRECTLY IN ANY WAY DETRIMENTAL TO THE INTEREST OF THE COMPANY.

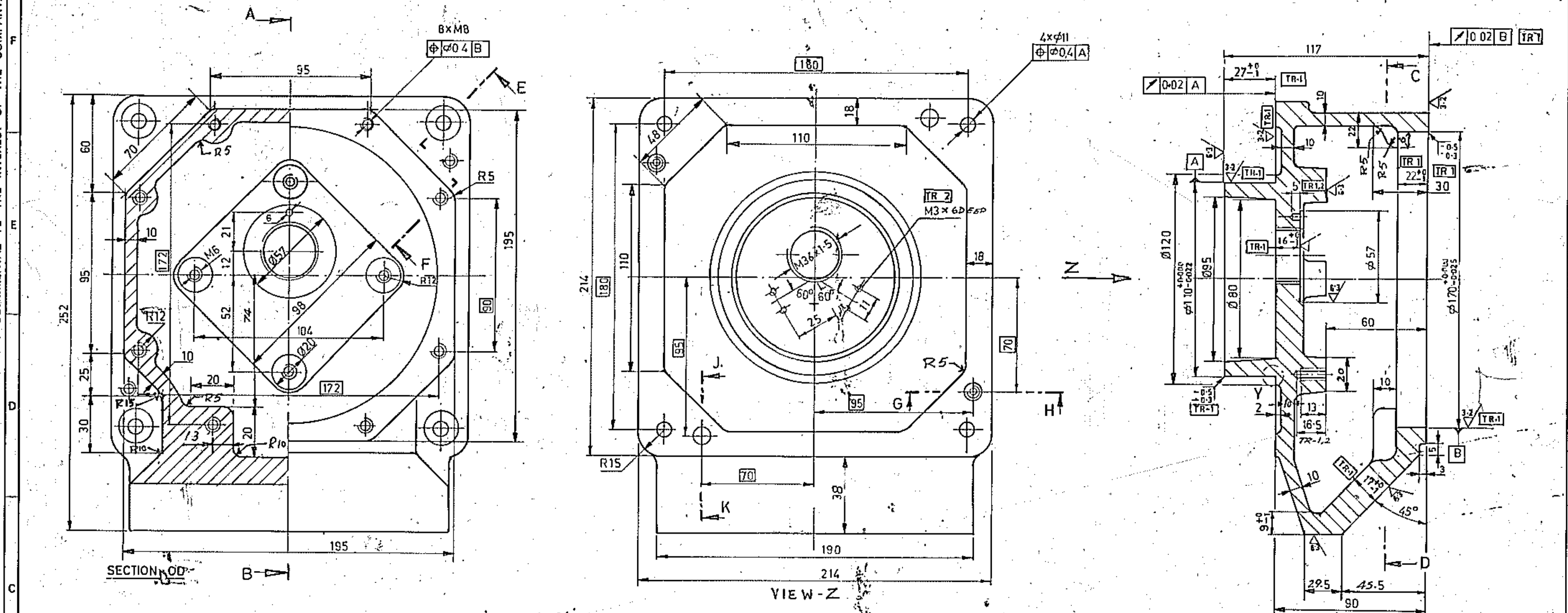

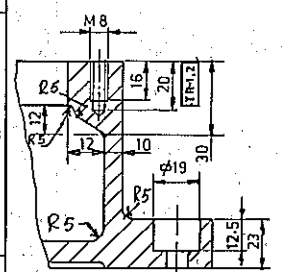

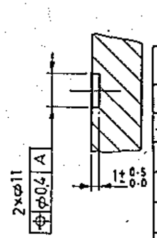

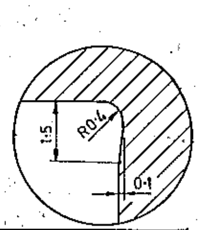

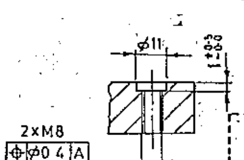

ATTENTION
FLAME & EXPLOSION PROOF

TECH. REQUIREMENT

1. SPECIAL SURVEILLENCE REQUIRED
2. REMAINING FINISHED WALL THICKNESS ≧ 6 MM
   UN-DIMENTIONED OUTER EDGES
   OUTER SURFACE TO BE GROUND TO FV 20502.
3. IT. 001 TO BE STRESS RELIEVED TO PR. S. 7110

TOOL LIST

IT.	TOOL NO.	DESCRIPTION
~~1~~	~~1567270~~	~~TURNING FIXTURE~~
1	1567271	MILLING FIXTURE
1	1567273	D.T. FOR VIEW-'Z', SECTION EF & 4-HOLES M16 + ONE HOLE
1	1567274	PLUG GAUGE, M36X1.5
~~1~~	~~1567308~~	~~GRINDING FIXTURE ON M16-4A173 TC46~~

GAUGE LIST

LIMITS	NOM SIZE	SYMBOL	TOOL NO.	ITEM	TYPE
110.00/109.978	110.00	-	1567272	1	CALIPER GAUGE
170.025/170.000	170.000	-	1567575	1	PIN GAUGE

001	TOP PART.	PATT. NO. 1241156	AA 19721	14

VAR. 01	REMARKS	VAR. NO.	ITEM NO.	DESCRIPTION	STD.	DRAWING NO.	IT. NO. / VAR.	MATL. CODE / MATL. SPECN.	UNIT	UNIT WT. / QTY.	GS	ZONE

CARD TYPE-3 — CARD TYPE-1 — CARD TYPE-2

ADDITIONAL INFORMATION
W.O. 41160A40711

STATUS OF DRAWING

DISTRIBUTION OF PRINTS
AME – 1 IMM – 3 PLM – 3
TEX – 1 FYM – 4

TYPE OF PRODUCT OR NAME OF CUSTOMER / PROJECT

REV	DATE	ALT.	
05			DISTRIBUTION FOR PLM ADDED.
02	13/5/92		DIMENSIONS 18 (E-2), 17 (D-2) WERE 15 & 16 RESPECTIVELY DIMENSION 45.5 & CASTING DIMENSIONS ADDED
04	9/3/93		TECH. REQT. NO. 3 ADDED; 1.25 CHANGED 3.2 TO
01	17/4/92		TOOL LIST & GAUGE LIST ADDED
3			DIMN. 18 & 70 ADDED (C-4) DIMNS. 29.5 & 45.5 WERE 13 & 50 RESPTLY.

BHARAT HEAVY ELECTRICALS LTD.
BHOPAL

	NAME	SIGN	DATE
DRN.	R.M. Sarode		24.1.92
CHD.	V.K. Jain		6.3.92
APPD.	VRG Moorthy		

DEPT. AME | CODE 404 | GRADE OF UN.TOL. DIM. | SCALE NTS | WEIGHT (Kg) | REF. TO ASSY. DRG.

TITLE
AUX T.B. BOTTOM PART
1xC9 400, EExd IIC

DRAWING NO. 2 40223 42007 REV. 05

SHEET NO. NO. OF SHEETS

SIZE A2

REF. DRG. NO. J014294