FIRST ANGLE PROJECTION

(ALL DIMENSIONS ARE IN mm)

DRG. NO. 2 521 10 01582

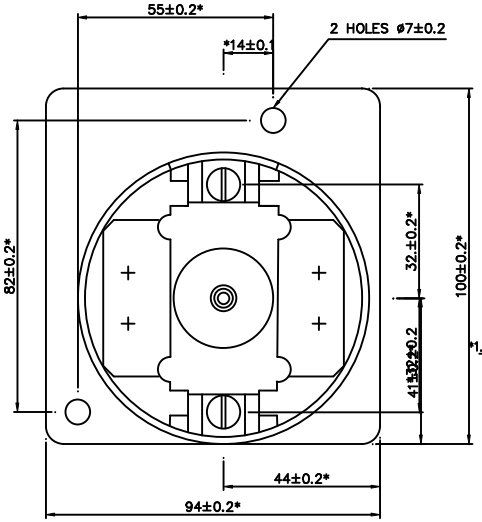

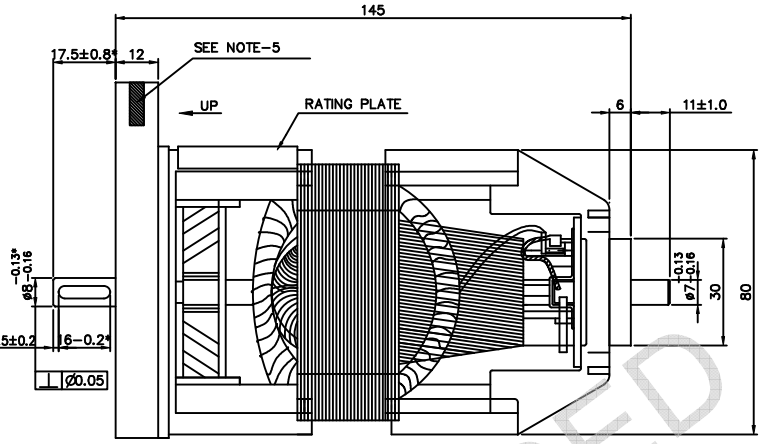

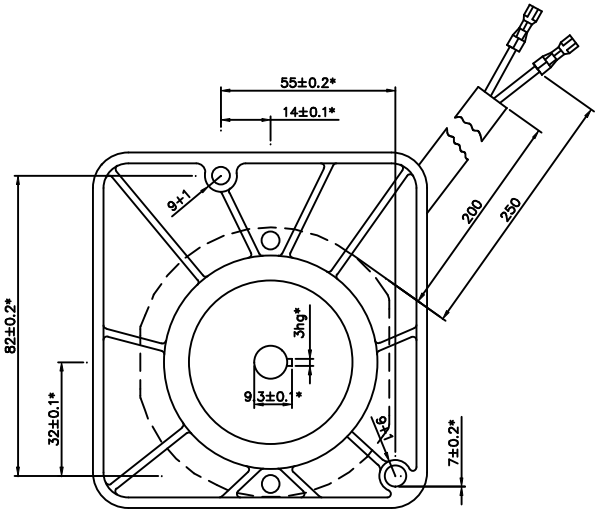

NOTE :-

1. REF. PRODUCT STANDARD SG 12710 FOR DETAILS OF RATING, MANUFACTURING & QUALITY INSTRUCTIONS.
2. DIM. MARKED THUS * ARE CRITICAL, FOR OTHER DIM. SUPPLIER SHOULD GET APPROVAL IN CASE OF DEVIATIONS.
3. SHAPE OF MOTOR SHOWN IS TYPICAL.
4. WEIGHT OF MOTOR IS 1.884 Kg.
5. ITEM 001-220V MOTOR WITH BLUE PAINT & ITEM 003 110V MOTOR WITH YELLOW PAINT AS MARKED FOR IDENTIFICATION.

RELEASED

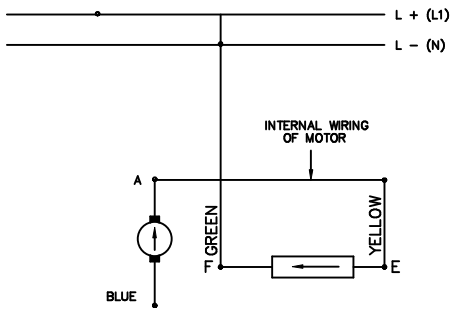

FOR ITEM 001 & 003
(FOR DC MOTORS)

ITEM 001 - GES 409846177
ITEM 003 - GES 409870038
ITEM 007 - GES 409870037

VAR.00	REMARKS	VAR NO.	ITEM NO.	DESCRIPTION	STD.	DRAWING NO.	IT.NO. / VAR.	MATL. CODE / MATL SPCN.	A C	UNIT	UNIT WT. / QTY.	CS	ZONE
BP9049468977			007	MOTOR 125V AC/DC				SG 12710			1.520 / 001		
~~ST-943516~~			006	~~MOTOR 230V AC~~				SG 12710					
~~ST-943242~~			005	~~MOTOR 24V DC~~									
~~ST-943211~~			004	~~MOTOR 90V DC~~									
BP9049432409			003	MOTOR 110V DC				SG 12710			1.520 / 001		
~~ST-943239~~			002	~~MOTOR 180V DC~~									
BP9049432018			001	MOTOR 220VDC/230VAC				SG 12710			1.520 / 001		

28 → CARD TYPE-3 | 28 → CARD TYPE-1 | 28 → CARD TYPE-2

ADDITIONAL INFORMATION

STATUS OF DRAWING

DISTRIBUTION OF PRINTS
O/C - 1
SMGR. PROD - 3
TCX - 1

TYPE OF PRODUCT OR NAME OF CUSTOMER/PROJECT: VN/VM/BVM/PVN

BHARAT HEAVY ELECTRICALS LTD. BHOPAL

	NAME	SIGN	DATE
DRN	C.H.U.	S/d	19.11.87
CKD	B.P.N.	S/d	19.11.87
APPD	R.K.G.	S/d	19.11.87

NO. OF VAR. -

REV.	DATE	ALTERED / CHECKED / APPD.	ZONE	
13	05.11.11	MKN / AKHIL / MAK		COLOR CODING NOTE ADDED. (DCA. NO. 30748)
12	10.08.06	PARE / ANITA / DIVYA		WEIGHT OF MOTOR ADDED. (DCA. NO. 26049)
11	24.10.04	/ / RM		DRG. REDRAWN ADDED. (DCA. NO. 21401)
10	9.6.99	S/d / S/d / S/d		CRITICAL DIM MARKED, NOTE 2 & 3 ADDED. (DCA 09521)

DEPT SWE | CODE 409 | UNTOL. DIMS. GR. DIM. C/M/F | SCALE 1:1 | WEIGHT(K.G.) - | REF.TO ASSY.DRG. 35211001555-011 TO 015 & 024 | ITEM NO. 003 | NO.OF ITEM

TITLE: MOTOR

DRAWING NO. 2 521 10 01582 | REV. 13

SHT. NO. 01 | NO. OF SHT. 01

A2 SIZE

THE INFORMATION ON THIS DOCUMENT IS THE PROPERTY OF BHARAT HEAVY ELECTRICALS LIMITED. IT MUST NOT BE USED DIRECTLY OR INDIRECTLY IN ANY WAY DETRIMENTAL TO THE INTEREST OF THE COMPANY.

REF. DRG. NO. | SIGN. & DATE | INVENTORY NO.

19/11/2014