FIRST ANGLE PROJECTION

(ALL DIMENSIONS ARE IN mm)

DRAWING NO 2 521 90 01013

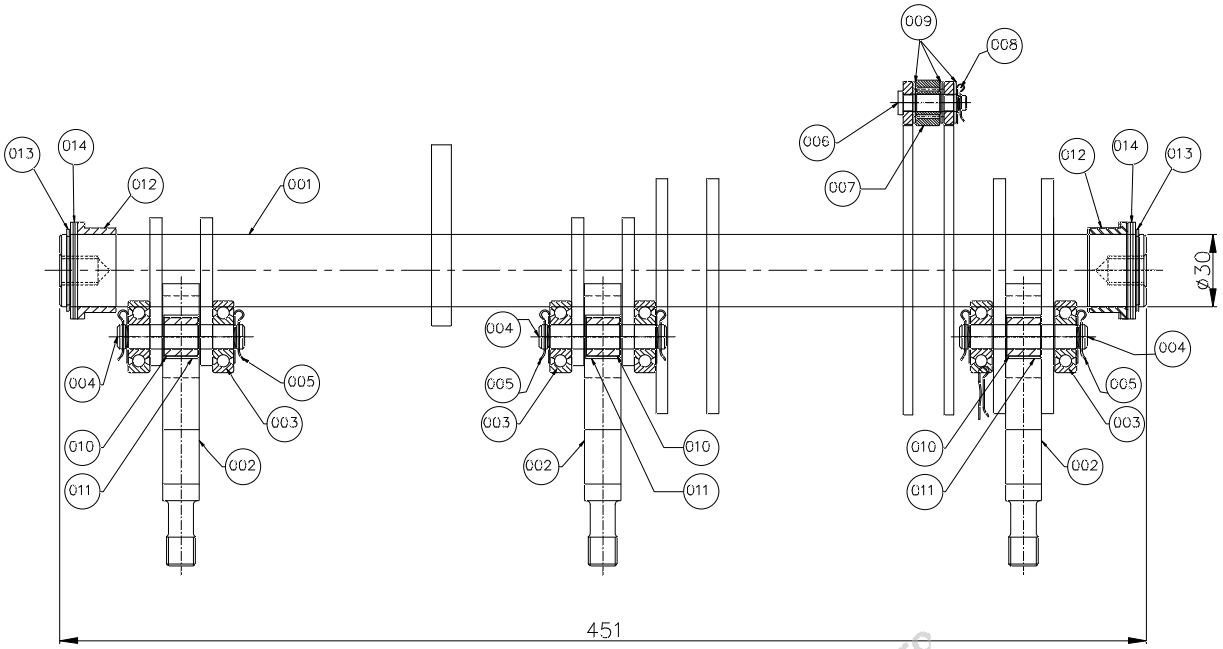

VAR. 00 : CODE NO. BP 9089124888

VAR.00	REMARKS	VAR NO	ITEM NO	DESCRIPTION	STD	DRAWING NO	IT.NO / VAR	MATL.CODE / MATL.SPCN	A/C	UNIT	UNIT WT. / QTY	GS	ZONE
012			014	WASHER FOR SHAFT		2 521 10 01566	007			KG.	0.015 / 001		
002			013	CIRCLIP FOR SHAFT		AA 7167001066	–			KG.	0.002 / 001		
002			012	BRASS BUSH		4 521 10 01505	001			KG.	0.159 / 001		
003			011	BUSH (M.S.TUBE)		4 521 10 01545	001			KG.	0.011 / 001		
003			010	RUBBER SPRING		4 521 10 01631	001			KG.	0.003 / 001		
003			009	WASHER		2 521 10 01556	002			KG.	0.002 / 001		
002			008	CLIP		2 521 10 01558	002			KG.	0.002 / 001		
001			007	SUPPORT ROLLER		4 521 10 01521	001			KG.	0.018 / 001		
001			006	PIN FOR SUPPORT ROLLER		4 521 10 01512	001			KG.	0.02 / 001		
006			005	CLIP		2 521 10 01558	006			KG.	0.003 / 001		
003			004	PIN FOR BEARING		4 521 10 01595	002			KG.	0.046 / 001		
006			003	BEARING		4 521 10 01633	001			KG.	0.075 / 001		
003			002	SPRING GUIDE		4 521 10 01544	001			KG.	0.159 / 001		
001			001	MECHANISM SHAFT		1 521 90 01503	00			KG.	5.753 / 001		

ADDITIONAL INFORMATION

STATUS OF DRAWING: M

DISTRIBUTION OF PRINTS: O/C-1 SWM-3 TCX-1

TYPE OF PRODUCT OR NAME OF CUSTOMER / PROJECT: VM12 (700)

BHARAT HEAVY ELECTRICALS LTD. BHOPAL

	NAME	SIGN	DATE	NO. OF VAR
DRN.	MKH	Sd/-	21.01.13	00
CKD.	ASHL	Sd/-	21.01.13	
APPD.	MAK	Sd/-	21.01.13	

DEPT.	UNTOL. DIMS OR	SCALE	WEIGHT (KG.)	REF. TO ASSY. DRG.	ITEM NO	NO. OF ITEM
SWE	M	1:1	–	–	–	008
CODE 409	AA0621104					

TITLE: ASSY. OF MECHANISM SHAFT VM-12 (700)

DRAWING NO. 2 521 90 01013 REV 00

SHEET NO. 01 NO. OF SHEETS 01

REV	DATE	ALTERED / CHECKED / APPROVED	ZONE

THE INFORMATION ON THIS DOCUMENT IS THE PROPERTY OF BHARAT HEAVY ELECTRICALS LIMITED. IT MUST NOT BE USED DIRECTLY OR INDIRECTLY IN ANY WAY DETRIMENTAL TO THE INTEREST OF THE COMPANY.

REF. DRG. NO. | SIGN & DATE | INVENTORY NO.

Work in Pro