FIRST ANGLE PROJECTION

(ALL DIMENSIONS ARE IN mm)

DRG. NO. 3 667 05 0 0052

THE INFORMATION ON THIS DOCUMENT IS THE PROPERTY OF BHARAT HEAVY ELECTRICALS LIMITED
IT MUST NOT BE USED DIRECTLY OR INDIRECTLY IN ANY WAY DETRIMENTAL TO THE INTEREST OF THE COMPANY

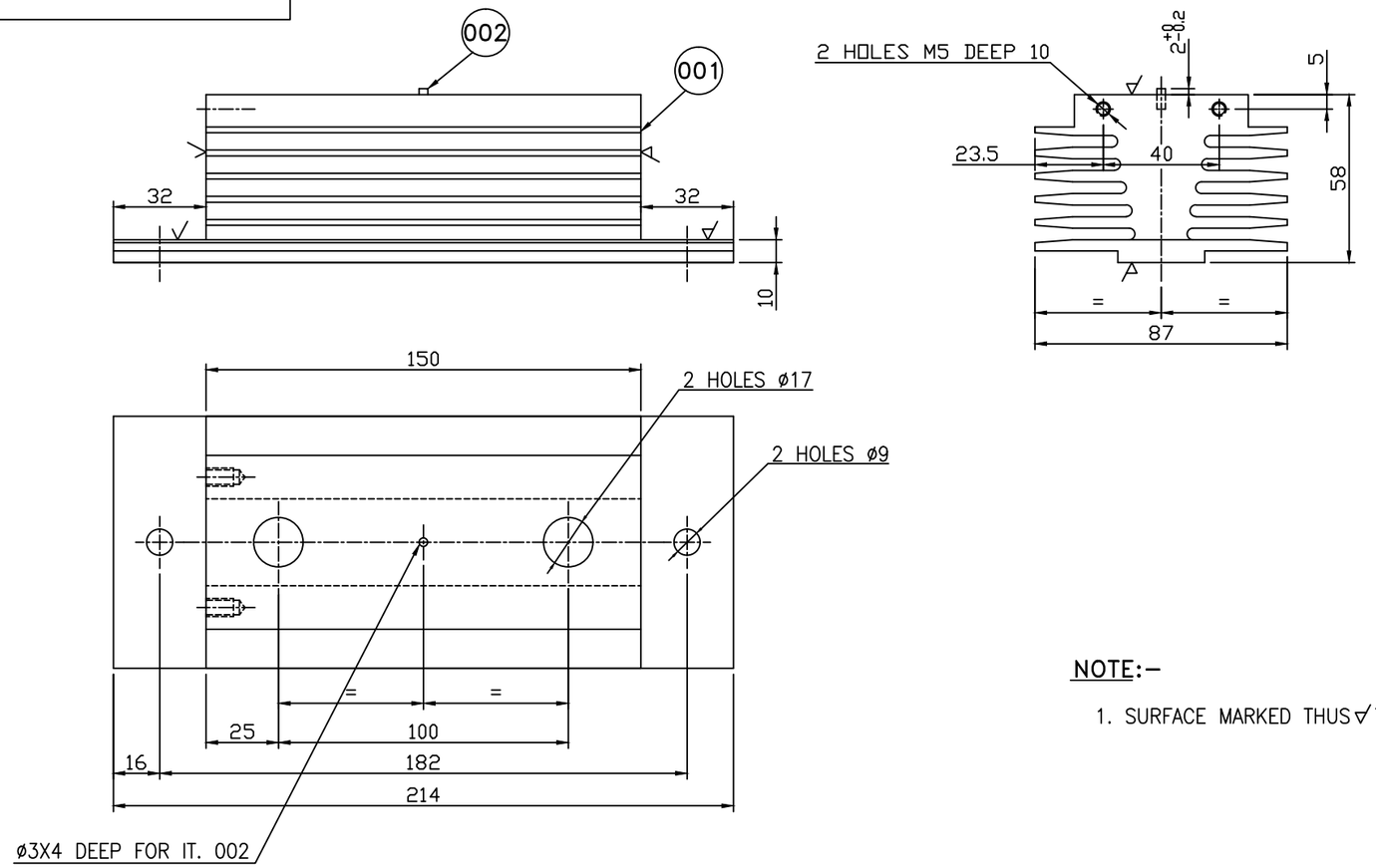

NOTE:-

1. SURFACE MARKED THUS ∀ TO BE FINISHED TO ±1.524 MICRONS.

001			002	SPRING TENSION PIN		4 583 10 3 0236	001						
001	ST CODE NO BP 9047565363		001	HEAT SINK		3 667 05 0 0043	001				0.900		
											214		
VAR.00	65 75 REMARKS	78 79 VAR. NO.	25 27 ITEM NO.	29 58 DESCRIPTION	59 STD	60 77 DRAWING NO.	29 31 IT.NO. / 32 33 VAR.	34 45 MATL. CODE / 46 54 MATL. SPCN.	55 A-C	56 57 UNIT	58 65 UNIT WT. / 68 71 QTY.	72 GS	ZONE

28 → CARD TYPE-3 | 28 → CARD TYPE-1 | 28 → CARD TYPE-2 | R/26/92

ADDITIONAL INFORMATION

STATUS OF DRAWING M

DISTRIBUTION OF PRINTS

OFFICE COPY -1
RFM -4
TCX(RFM) -1

COMPUTERISED DRAWING	CHD.	APPD.
NAME	J.D.B.	V.J.
SIGN.	[signature]	[signature]
DATE	08.03.2013	08.03.2013

उत्पाद का प्रकार या ग्राहक/परियोजना का नाम
TYPE OF PRODUCT OR NAME OF CUSTOMER/PROJECT

AC/DC/DE LOCO
INDIAN RAILWAYS

बी एच ई एल BHEL
भारत हेवी इलेक्ट्रिकल्स लिमिटेड भोपाल
BHARAT HEAVY ELECTRICALS LTD. BHOPAL

	नाम/ NAME	हस्ता/ SIGN	दिनांक/ DATE	वे.रि. की संख्या NO. OF VAR
बनाया DRN	RAJAN	sd/-	07.12.85	
जँचा CKD	N.H.J.	sd/-		
अनुमोदित APPD	N.H.J.	sd/-		00

REV.	DATE		REV.	DATE		REV.	DATE	
05	31.10.94	ALTERED D.P.V. -Sd- / CHECKED P.T.P. -Sd- / APPROVED P.T.P. -Sd-	04	31.12.93	ALTERED D.P.V. -Sd- / CHECKED P.T.P. -Sd- / APPROVED P.T.P. -Sd-	03	18.08.93	ALTERED D.P.V. -Sd- / CHECKED P.T.P. -Sd- / APPROVED P.T.P. -Sd-
		HEAT SINK PROFILE MODIFIED AS PER REV.06 OF DRAWING NO 3 667 050 0043 (IT.001) E 372			DIM. 10 ADDED. E 203			DRG. REDRAWN. IT. 002 ADDED. E 134

विभाग DEPT	अन. टाल. नाप की श्रेणी UNTOL.DIMS. GR.	अनुपात SCALE	भार कि.ग्रा. WEIGHT (K.G.)	असे. ड्राईंग का संदर्भ REF. TO ASSY. DRG.	मद क्र. ITEM NO.	मद. संख्या NO. OF ITEM
CEE	REF. CG 06503	1:2	–	VAR. 00-2 667 05 0 066	001	002

कोड CODE 407

शीर्षक/ TITLE: D.C. HEAT SINK ASSY.

आरेख क्रं/ DRAWING NO. 3 667 05 0 0052 | पुन./REV 05

पृष्ठ क्रं/SHT. No. 01 | पृष्ठों की संख्या/ NO. OF SHT. 01

REF. DRG. NO. | SIGN. & DATE | INVENTORY NO.

A3