FIRST ANGLE PROJECTION

(ALL DIMENSIONS ARE IN mm.)

DRAWING NO. 3 667 05 00366

THE INFORMATION ON THIS DOCUMENT IS THE PROPERTY OF BHARAT HEAVY ELECTRICALS LIMITED.
IT MUST NOT BE USED DIRECTLY OR INDIRECTLY IN ANY WAY DETRIMENTAL TO THE INTEREST OF THE COMPANY.

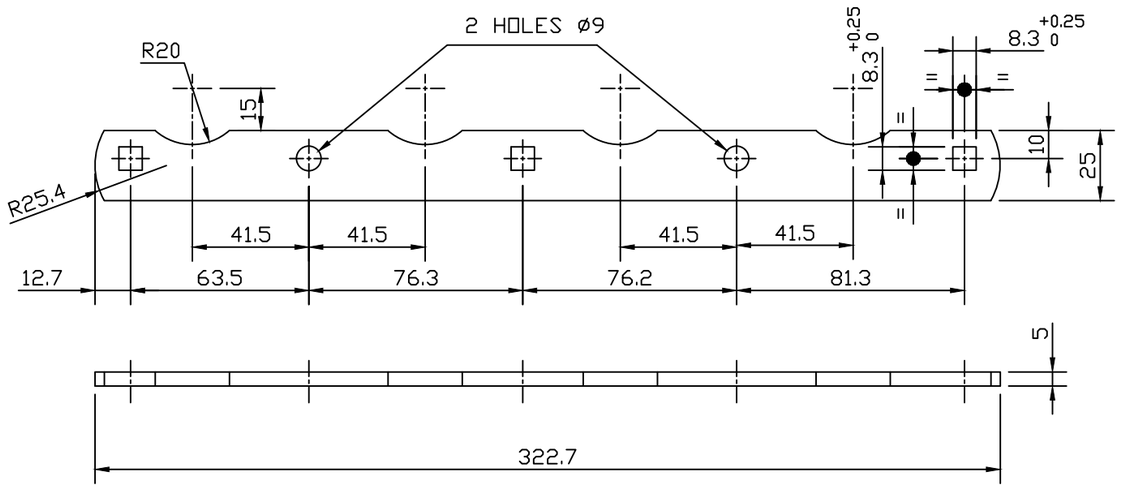

ITEM – 001

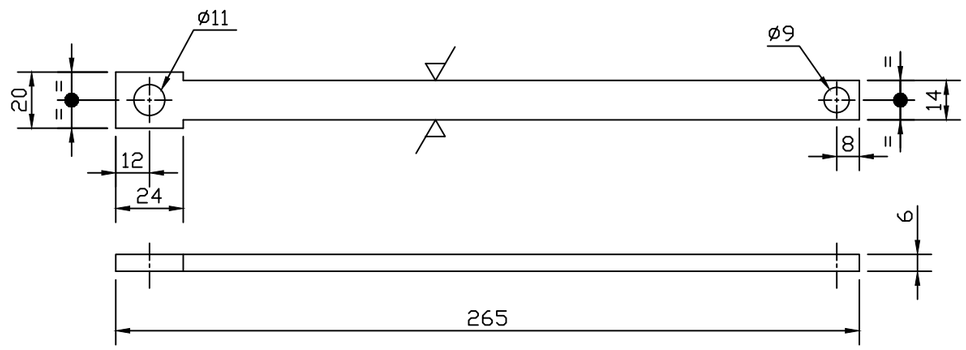

ITEM – 002

FINISH :–
ELECTRO-TIN ITEMS 001 & 002 TO PR.S. AA 0673602 (0.008TK).

VAR. 00	REMARKS	VAR NO.	ITEM NO.	DESCRIPTION	STD.	DRAWING NO.	IT. NO. / VAR	MATL. CODE / MATL. SPCN.	A/C	UNIT	UNIT WT. / QTY.	GS.
–			002	BUS BAR 20 X 6 COPPER STRIP				AA12003		KG / MM	0.200 / 265	
–			001	BUS BAR 25 X 5 COPPER STRIP				AA12003		KG / MM	0.330 / 322.7	

REF. DRG. NO. 36670500185

SIGN. & DATE

INVENTORY No.

ADDITIONAL INFORMATION

STATUS OF DRAWING M

DISTRIBUTION OF PRINTS
OFFICE COPY – 1
RFM – 4
TCX (RFM) – 1

उत्पाद का प्रकार या ग्राहक / परियोजना का नाम
TYPE OF PRODUCT OR NAME OF CUSTOMER/PROJECT: ALT. RECTIFIER FOR WDG4 INDIAN RAILWAYS

बी.एच.ई.एल. BHEL
भारत हेवी इलेक्ट्रिकल्स लिमिटेड
भोपाल
BHARAT HEAVY ELECTRICALS LTD.
BHOPAL

	नाम /NAME	हस्ता /SIGN.	दि. /DATE	वेरि की संख्या NO. OF VAR.
बनाया DRN.	V.J.		06.08.14	–
जांचा CKD.	ASA		06.08.14	
स्वीकृत APPD.	SKR		06.08.14	

REV	DATE	
		ALTERED
		CHECKED
		APPROVED

REV	DATE			
01	21.10.14	ALTERED	V.J.	
		CHECKED	ASA	
		APPROVED	SKR	

DIMS. 41.5 (AT 4 PLACES), 15, & R20 ADDED IN ITEM 001.

विभाग DEPT. CEE
कोड CODE. 407
अन.टाल.नाप की श्रेणी UNTOL. DIMS. GR. REF CG 06503
अनुपात SCALE 1 : 2
भार कि ग्रा WEIGHT (K.G.)

असे. ड्राइंग का संदर्भ REF. TO ASSY. 16670500092
मद संख्या ITEM NO. –
मद संख्या NO. OF ITEM 002

शीर्षक /TITLE: BUS BAR

ड्राइंग क्र./DRAWING NO. 3 667 05 00366
पुन./REV. 01

शीट क्र. /SHT.NO 01 | शीटों की सं./NO.OF.SHT. 01