Annexure 1

Spec of MICAVER INSULATOR

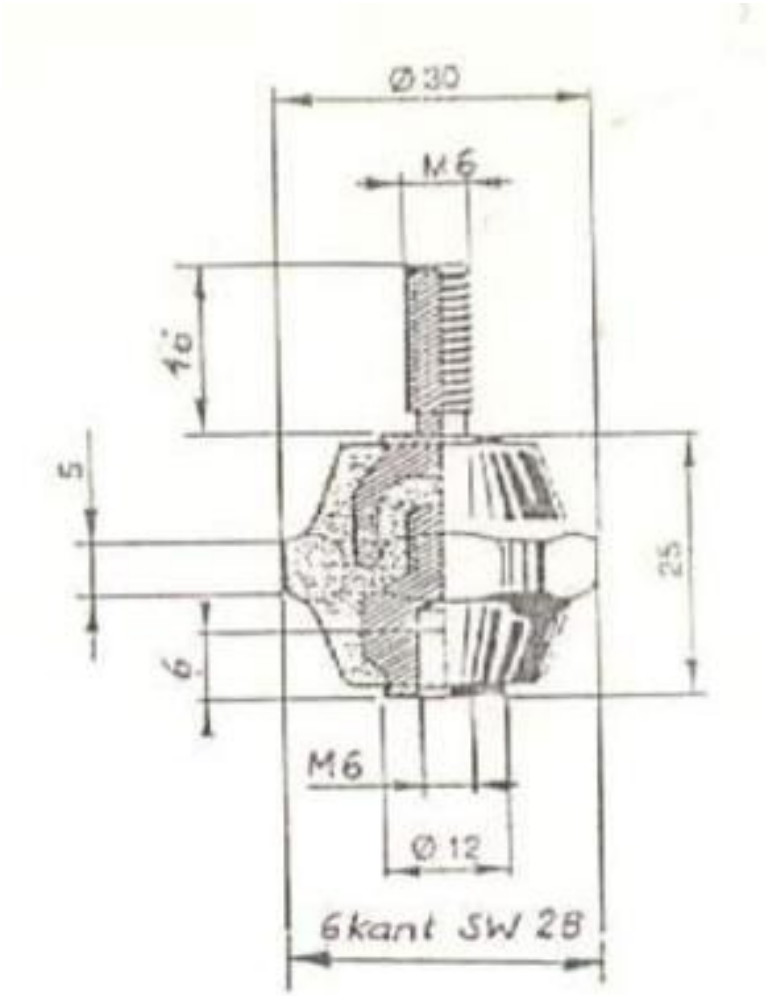

Mechanical:				
	Tensile strength	KN	:	8
	Compressive strength	KN	:	11
	Torsion	Nm	:	18
	MASS	Kg	:	0.08
Electrical				
	Creepage distance	mm	:	30
	Isolation voltage	1min 50 Hz	:	12
	Nominal voltage			
	Inside clean CLASS 2		:	1500V
	Inside dirty CLASS 3		:	1000V
	EXTERNAL CLASS 4		:	350V
	Capacity	pF	:	16

Insulator	:	**Glass-mica-compound**
Attachment Fitting	:	**Nickel plated steel**
Resistant to	:	**Water** **Ozone, Marine atmosphere**
Usable temperature range	:	**-30°C to +300°C**
Flammability	:	**inflammable**