FIRST ANGLE PROJECTION

(ALL DIMENSIONS ARE IN m.m.)

DRAWING NO. 5048986

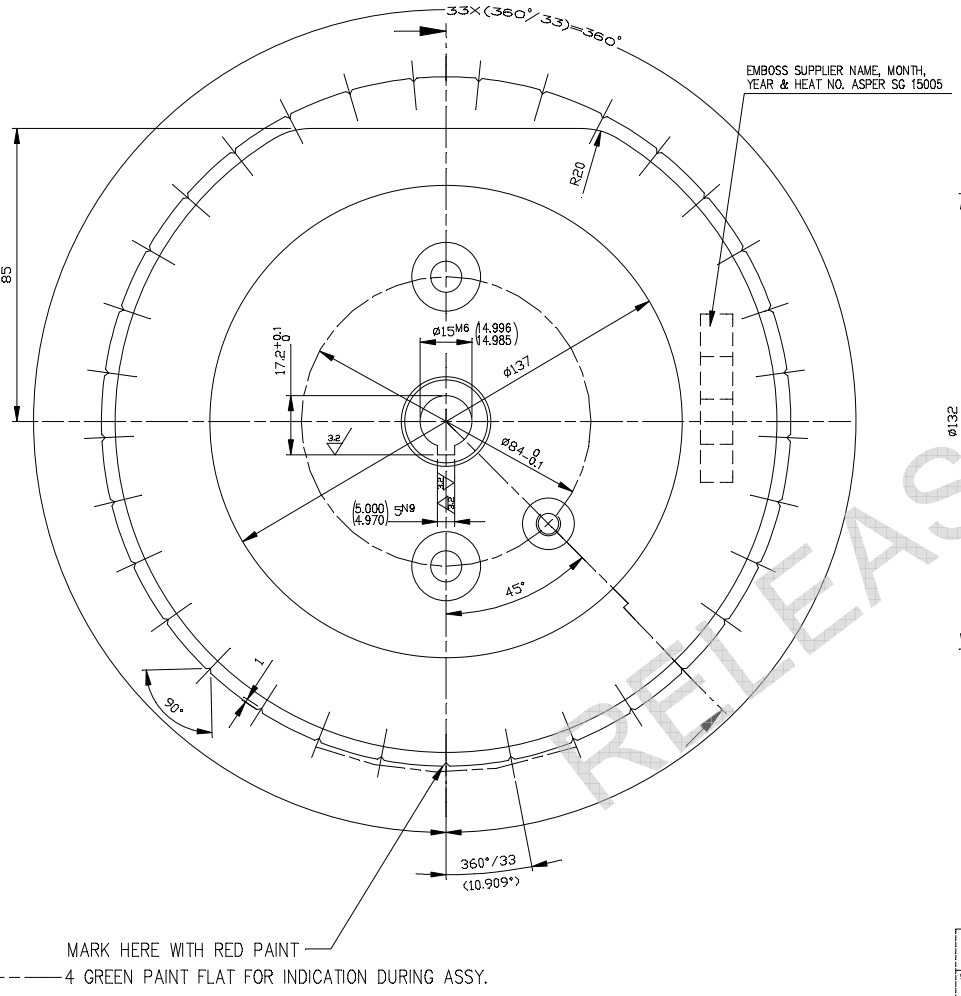

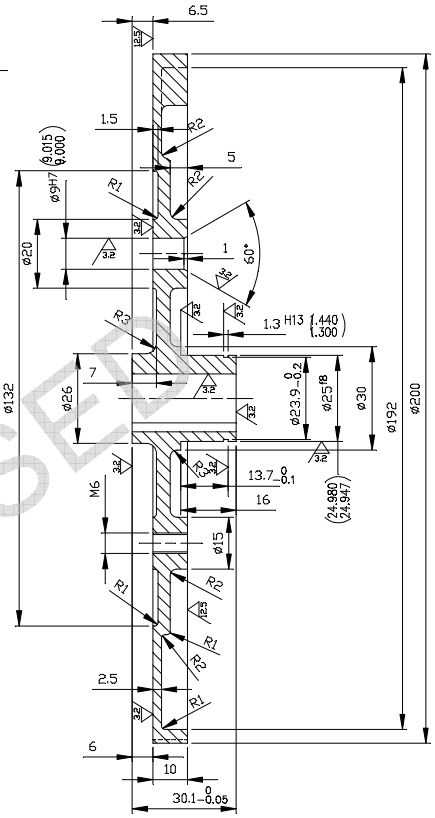

TOOL LIST		
ITEM	TOOL NO.	DESCRIPTION
–	1463550	GRAVITY DIE CASTING
–	1463798	DRILL JIG
–	1463799	SLOTTING FIXTURE
–	1463800	HOLDING FIXTURE ON MILLING
–	1520212	KEY WAY BROACH 5N9
–	1520341	BROACHING FIXTURE
–	1520346	BROACHING ADOPTER PLATE

CASTING TAPER–2°

(12.5 / 3.2)

	CASTING PART NO. 5236211		001	ALUMINUM ALLOY GRAVITY DIE CASTING					KG.	0.40
								AA19953		001
VAR00	REMARKS	VAR. NO.	ITEM NO.	DESCRIPTION	STD	DRAWING NO.	IT.NO.	MATL. CODE	UNIT WT.	
							VAR.	MATL. SPCN.	QTY.	

28 → CARD TYPE-3 28 → CARD TYPE-1 28 → CARD TYPE-2

ADDITIONAL INFORMATION

STATUS OF DRAWING

DISTRIBUTION OF PRINTS

SWE	SWM	TCPO
1	3	1

TYPE OF PRODUCT OR NAME OF CUSTOMER/PROJECT: ON LOAD TAP CHANGER

BHARAT HEAVY ELECTRICALS LTD. BHOPAL

	NAME	SIGN	DATE	NO. OF VAR.
DRN.	PVS	sd/-	05.01.77	
CKD.	BSR	sd/-	05.01.77	
APPD.	BSS	sd/-	05.01.77	

REV.	DATE	ALTERED	REV.	DATE	ALTERED	REV.	DATE	ALTERED	REV.	DATE	ALTERED	REV.	DATE	ALTERED
		CHECKED			CHECKED			CHECKED	07	27.02.10	CHECKED KIRTI	06	20.07.05	CHECKED SKP
		APPROVED			APPROVED			APPROVED			APPROVED SKP			APPROVED SK
ZONE			ZONE			ZONE			ZONE A/5 C/5-6		VIEW CORRECTED DIM ø192 AND ø132 WERE ø194 AND ø138 RESPECTIVELY (DCA NO.-29617)	ZONE		DRG. REDRAWN (DCA NO.-23467)

DEPT.	UNTOL. DIMS. GR.	SCALE	WEIGHT (K.G.)	REF. TO ASSY. DRG.	ITEM NO.	NO. OF ITEM
SWE CODE 409	MEDIUM AA0230208	1:1		5011794		001

TITLE: STEP BY STEP INDICATING WHEEL

DRAWING NO. 5048986 REV. 07

SHEET NO. 01 NO. OF SHEETS 01

THE INFORMATION ON THIS DOCUMENT IS THE PROPERTY OF BHARAT HEAVY ELECTRICALS LIMITED. IT MUST NOT BE USED DIRECTLY OR INDIRECTLY IN ANY WAY DETRIMENTAL TO THE INTEREST OF THE COMPANY.

INVENTORY NO. | SIGN. & DATE | REF. DRG. NO. 5048986-R05-S01

AJ(PPWC&CS)

RELEASED

22/03/2014